Contents

KOFFST 2014 Korean Federation of Fisheries Science and Technology Societies

Opening Address

Ladies and Gentleman, Welcome to Busan.

It is my great honor to address the opening of the “2014 International conference of the Korean Federation of Fisheries Science and Technology Societies (KOFFST).

First of all, I would like to acknowledge the presence of Busan Metropolitan City, Mr. Lee Young-Hwal, Vice Major for Economic Affairs, Chung Young-Hoon, President of National Fisheries Research & Development Institute, Prof. B. Sampson, Prof. Iida Koichi, Prof. Tetsuji Nakabo, Prof. Makoto Osada, Prof. Junseng Zhong and distinguished keynote scholars who traveled far distance to participate in this Federation.

I would also like to express my gratitude for all the outstanding invited speakers of each society of the Federation, honorable conference participants, organize committee members.

I am very happy to report that the Federation is holding the 2014 International Conference on “The Applicability of Global Advanced Science and Technology of Fisheries” with the domestically and internationally well known researchers and scientists from 7 different countries, 290 domestic and international presentations, approximately 400 participants including many foreign friends and colleagues from five Korean fisheries related societies of the Federation. I am sure that, this Federation will provide not only fishery science development framework for the various domestic and international agenda, but also a guideline for the applicability of global advanced science.

Ladies and gentleman!

Please allow me to express my heartfelt thanks to all the participants who will share their insights with us. Moreover, I wish that not only you will learn our Korean Culture but also enjoy each moment of your stay in my beloved country.

Without further adieu, as the President of the Federation, I now have the great pleasure to open this International Conference.

Thank you very much.

Youn Choi

President of KOFFST

Congratulatory Address

Distinguished guests from home and abroad,

First of all, I would like to congratulate Korean Federation of Fisheries Science and Technology Societies (KOFFST) on holding 2014 International Conference in Busan today.

I also would like to extend my sincere gratitude to Mr. Lee, Young-hwal, Vice-mayor for Economic Affairs of Busan Metropolitan City, a renowned keynote speaker, professor David Sampson of Oregon State University who has made a long way trip to Korea, and respected presidents of 5 Fisheries Societies, including Korea Fisheries Association and all the conference participants who have committed themselves for the growth of our fisheries science technology.

My special appreciation also goes to President Choi, Yoon and all the members of KOFFST who made tireless efforts to organize this conference.

Distinguished participants,
Fishery industry in Korea plays a critical role in our fight against food crisis, but there have been several risk factors associated with it. Externally, we are witnessing fierce competition on the international fisheries market due to climate change and the effectuation of our FTAs with major global economies such as EU, USA, and China. Internally, we are in urgent need of new strategies and technologies to respond to low productivity, labor-intensive operations, and the aging of fishermen.

In this regard, I hope today's conference under the banner of "Applicability of Global Advanced Science and Technology of Fisheries" will serve as an opportunity to come up with policies to advance our fishery industry by exchanging up-to-date

research outcomes and cutting-edge technologies among participating fisheries societies, and by learning from prestigious experts.

In particular, this conference is all the more meaningful as it is held in connection with Busan International Seafood and Fisheries EXPO 2014 which is the largest of its kind in Korea, showcasing seafood, fisheries equipment, and marine biotechnology products.

Once again, I would like to deliver my heartfelt appreciation to all of you for participating in today's conference despite your busy schedule.
My best wishes on your health and prosperity.

Thank you for your attention.

July 2, 2014
Chung, Young-Hoon
President of National Fisheries Research and Development Institute (NFRDI)

Officers and Board Members in 2014

President : Choi, Youn (Kunsan National University)

Vice-presidents : Kim, Dong-Soo (Korea Food Research Institute)
Kim, Jin-Woo (National Fish. Res. & Develop. Inst.)
Jang, Choong-Sik (Gyeongsang National University)
Oh, Bong-Se (National Fish. Res. & Develop. Inst.)

Planning committee chair and members

Chair : Jeong, Choong-Hoon (Inha University)

Members : Jung, Won-kyo (Pukyong National University)
Jee, Bo-Yeong (National Fish. Res. & Develop. Inst.)
Kang, Myoung-Hee (Gyeongsang National University)
Park, Kwang-Jae (National Fish. Res. & Develop. Inst.)

Program Schedule

The Applicability of Global Advanced Science and Technology of Fisheries

Time	Activities	
09:00	Registration	
09:30-10:00	Opening Ceremony (Chairman, Dr. CH Jeong, KOFFST)	
	Introduction: KOFFST president, Invited speakers, renown participants	
	Opening address: Dr. Y Choi, President, KOFFST, Rep. of Korea	
	Welcome address: Mr. YH Lee, Vice-mayor for Economic Affairs, Busan Metropolitan City, Rep. of Korea	
	Congratulatory address: Mr. YH Chung, President, NFRDI, Rep. of Korea	
	Group photo	
10:00-10:50	Plenary Session (Chairman, Dr. MH Kang, KOFFST)	
10:50-11:00	Break Time	
11:00-12:00	Business meeting for the society	
12:00-13:00	Lunch Time	
13:00-18:00	Invited presentation, council meeting, general assembly, award ceremony, presentation (oral, poster)	
18:00-20:00	KOFFST Reception	KOFFST Secretary

각 학회별 행사일정표

(1) 한국수산과학회

시간	내용	사회자
11:00-13:50	평의회 및 총회 (안건토의, 재무보고, 회장단 선출 등)	간사장
13:50-14:50	Part Ⅰ 구두발표	정원교(부경대) 배승철(부경대) 김진구(부경대)
15:00-16:15	Part Ⅱ 구두발표	제재영(전남대) 최광식(제주대) 최정화(수과원)
16:35-17:00	각 분과별 시상식	

(2) 한국어류학회

시간	내용	사회자
13:30-14:00	총회 및 이사회 (안건토의, 재무보고, 회장단 선출 등)	총무간사
14:00-14:50	초청강연 (Prof. Tetsuji NAKABO)	정충훈(인하대)
15:00-16:00	Part Ⅰ 구두발표	이완옥(수과원)
16:20-17:00	Part Ⅱ 구두발표	김진구(부경대)
17:00-18:00	포스터발표	

(3) 한국어병학회

시간	내용	사회자
13:00-14:20	어병학회 등록	총무간사
14:20-14:30	한국어병학회 개회	한국어병학회장
14:30-15:30	초청강연	최혜승(수과원)
15:50-16:50	Part Ⅰ 구두발표	박관하(군산대)
17:10-17:50	Part Ⅱ 구두발표	김기홍(부경대)

(4) 한국어업기술학회

시간	내용	사회자
11:20-12:00	초청강연 (Prof. Kohji IIDA)	이대재(부경대)
13:00-14:40	Part Ⅰ 구두발표	장호영(군산대)
14:40-16:20	Part Ⅱ 구두발표	안장영(제주대)
16:20-18:00	Part Ⅲ 구두발표	김석종(제주대)

(5) 한국패류학회

시간	내용	사회자
11:00-12:00	총회 및 이사회	총무간사
13:00-13:40	초청강연 (Prof. Makoto OSADA)	최광식(제주대)
14:00-15:00	Part Ⅰ 구두발표	박경일(군산대)
15:00-16:00	Part Ⅱ 구두발표	조상만(군산대)
16:00-18:00	포스터발표	

Venue Info

◦ 국제학술대회 개회식 및 특강 : 벡스코 컨벤션홀 1층 105호
◦ 학회별 총회 및 구두 발표 : 벡스코 컨벤션홀 1층 (101호~110호 107, 108호제외)
◦ 포스터 발표 : 벡스코 컨벤션홀 1층 로비
포스터는 가로 80 cm, 세로 110 cm, 09:00~18:00 지정된 위치에 부착
압정 및 양면테이프 본인 준비

<table>
<tr><th colspan="2">학회별 구두발표회장</th><th colspan="2">학회별 총회장</th></tr>
<tr><td>한국어업기술학회</td><td>103호</td><td>한국어업기술학회</td><td>103호</td></tr>
<tr><td>한국어병학회</td><td>102호</td><td>한국어병학회</td><td>102호</td></tr>
<tr><td>한국어류학회</td><td>101호</td><td>한국어류학회</td><td>101호</td></tr>
<tr><td>한국패류학회</td><td>106호</td><td>한국패류학회</td><td>106호</td></tr>
<tr><td>수산이용가공</td><td>109호</td><td rowspan="3">한국수산과학회</td><td rowspan="3">105호</td></tr>
<tr><td>양식・생물공학</td><td>105호</td></tr>
<tr><td>자원・해양・환경</td><td>110호</td></tr>
<tr><td colspan="4">*포스터 전시: 1층 로비</td></tr>
</table>

▌Registration Info

<table>
<tr><th colspan="2">등록장소</th><th colspan="2">벡스코 컨벤션홀 1층 로비 등록데스크</th></tr>
<tr><td rowspan="2">등록비</td><td>일반</td><td>60,000원</td><td rowspan="2">중식 및 간친회비 포함</td></tr>
<tr><td>학생</td><td>20,000원</td></tr>
</table>

▌Traffic Info

☆ 버스 : 5, 5-1, 31, 36, 39, 40, 63, 100, 100-1, 115-1, 139, 141, 155, 181, 200-1, 1001, 1002번 이용 - 센텀시티역(벡스코) 하차

☆ 지하철 : 2호선 센텀시티역 하차

☆ 주차안내

- 주차비는 한국수산과학총연합회 본부에서 지원하지 않습니다.
- 주차권 발급을 받으실 때, 1일용으로 받으셔야 합니다. (1일 10,000원)
  단, 수시로 출입하면 매번 주차비는 별도로 지불하셔야 합니다.
  (최초 30분 1,000원, 초과 30분당 500원)

Plenary Session (PS-1)

Convention Hall, BEXCO 105

Chair: Myoung-Hee Kang (Gyeongsang National University)

10:00-10:50 PS-1

Drivers of fishery dynamics: Examples from the U.S. West Coast.

David B. Sampson, PhD
Professor of Fisheries Coastal Oregon Marine Experiment Station and Department of Fisheries and Wildlife
Hatfield Marine Science Center Oregon State University

Invited Speaker Session (PS-2 ~ PS-9)

Convention Hall, BEXCO 101

Chair: Choong-Hoon Jeong (Inha University)

14:00-14:50 PS-2

Struggles with species limits-fishes

Tetsuji Nakabo D. Agr.
Professor of The Kyoto University Museum, Kyoto University, Japan

PS-3 [poster session]

Molecular insights into geographic and morphological variation within the *Eumicrotremus asperrimus* species complex (Cottoidei: Cyclopteridae)

Yoshiaki KAI[1], Duane E. STEVEBSON[2], Yuji UEDA[3], Tomonori HAMATSU[4] and Tetsuji NAKABO[5]
[1]Maizuru Fisheries Research Station, Field Science Education and Research Center, Kyoto University, Japan; [2]National Marine Fisheries Service, NOAA Fisheries, Alaska Fisheries Science Center; [3]Japan Sea National Fisheries Research Institute, Fisheries Research Agency; [4] Hokkaido National Fisheries Research Institute, Fisheries Research Agency; [5]The Kyoto University Museum, Kyoto University

PS-4 [poster session]

Temporal and spatial variation of fish larvae and juvenile assemblages in the north of Hangzhou Bay, China

Junsheng ZHONG[1],Xin YAN[1],Mingxing WANG[1]and Choong-Hoon JEONG[2]
[1]College of Fisheries and Life Science, Shanghai Ocean University, China
[2]Ocean Science & Technology Institute, Inha University, Korea

PS-5 [poster session]

Stable isotopes ($\delta^{15}N$ and $\delta^{13}C$) analysis of anadromous and non-anadromous *Coilia nasus* in the Yangtze River, China

Wenqiao TANG[1], Lei WANG[1] and Choong-Hoon JEONG[2]
[1]College of Fisheries and Life Science, Shanghai Ocean University, China
[2]Ocean Science & Technology Institute, Inha University, Korea

Convention Hall, BEXCO 102

Chair: Hye-Sung Choi (NFRDI)

14:30~15:00 PS-6

Disease management status and problems of marine mammals in Korea

°Doo hae An
Director of Cetacean Research Institute, National Fisheries Research and Development Institute

15:00~15:30 PS-7

Marine plant diseases and their management

°Han Gil Choi, [2]Young Sik Kim, [3]Soon Jeong Lee, [3]Bo Young Jee and [3]Myoung Ae Park
Faculty of Biological Science, Wonkwang University, Korea,
[2]School of Marine Life Science, Kunsan National University, Korea, [3]National Fisheries Research and Development Institute, Korea

Convention Hall, BEXCO 103

Chair : Dae-Jae Lee (Pukyong National University)

11:00~12:00 PS-8

The Three Sacred Treasures in Fisheries Acoustics - Quantitative echosounder, Scanning sonar, Acoustic camera -

Kohji Iida
Faculty of Fisheries Sciences, Hokkaido University, 3-1-1 Minato-cho Hakodate, Hokkaido, 0418611, Japan

Convention Hall, BEXCO 106

Chair : Kwang-Sik Choi (Jeju National University)

13:00~13:40 PS-9

Neuroendocrine control of gametogenesis and spawning in bivalve molluscs; potential manipulation of reproductive system

Makoto Osada
Graduate School of Agricultural Science Tohoku University, Japan

Oral Presentation (OP-1 ~ OP-50)

▣ Fisheries Processing/Uses (Convention Hall, BEXCO 109)

Chair : Won-Kyo Jung (Pukyong National University)

13:50~14:05 OP-1

Changes in Chemical Indexes of Antarctic Krill Oil by Treatments of Different Chemicals

Soo-Bin Lee and Seon-Bong Kim

Department of Food Science and Technology, Pukyong National University

14:05~14:20 OP-2

Deodorant Activity of Botanical Polyphenolic Compounds against Methyl Mercaptan

Yeon Kim[1], Young-Mog Kim[1], Hyeung-Rak Kim[2] and Seon-Bong Kim[1*]

[1]Department of Food Science and Technology, Pukyong National University

[2]Department of Food Science and Nutrition, Pukyong National University

14:20~14:35 OP-3

Optimization of Sphericity for Production of Capsule Type Fish Roe Analogs

Eun-Hee Jo[1], Sueng-Mok Cho[2] and Seon-Bong Kim[1]

[1]Department of Food Science and Technology, Pukyong National University

[2]Korea Food Research Institute

14:35~14:50 OP-4

Characterization of Bioactive Compounds in Brown Seaweed (*Sargassum horner*) Hydrolyzate using Subcritical Water

Yin Shipeng, and Byung-Soo Chun

Department of Food Science and Technology, Pukyong National University

14:50~15:00 Coffee Break

Chair : Jae-Young Je (Chonnam National University)

15:00~15:15 OP-5

Setting of oyster shelf life and quality improvement

Woo Young Jung

Department of Food Science and Technology, Pukyong National University

15:15~15:30 OP-6

Calcium binding peptide from *Johnius belengerii* frame enhances bone regeneration and suppresses inflammation

Seong-Yeong Heo*, Won-Kyo Jung

Department of Biomedical Engineering, and Center for Marine-Integrated Biomedical Technology (BK21 Plus)

Pukyong National University

15:30~15:45 OP-7

Improvement of chemical compositions and bioactivities of marine bioresources desalted by electro-dialysis

Gun-Woo Oh and Won-Kyo Jung*

Department of Biomedical Engineering, and Center for Marine-Integrated Biomedical Technology (BK21 Plus)

Pukyong National University

▣ Aquaculture (Convention Hall, BEXCO 105)

Chair : Sungchul C. Bai (Pukyong National University)

13:50~14:05 OP-8

Cytogenetic study of diploid and induced tetraploid in Korean rose bitterling, *Rhodeus uyekii*

Hyun Woo Gil[1]*, Hee Jeong Kong[2], Chul Min Ahn[2], Bong Seok Kim[3] and In-Seok Park[1]
[1]Division of Marine Environment and Bioscience, College of Ocean Science and Technology, Korea Maritime and Ocean University
[2]Biotechnology Research Division, National Fisheries and Development Institute (NFRDI)
[3]Reseach and Development Planning Department, NFRDI

14:05~14:20 OP-9

Comparison of cell and nuclear size difference between diploid and induced triploid in marine medaka, *Oryzias dancena*

In Bon Goo[1] · Hyun Woo Gil[2]* · Hyoung Kyun Han[1] · Sang Gu Lim[1] · In-Seok Park[2]
[1]Inland Aquaculture Research Center, National Fisheries Research and Development Institute
[2]Department of Marine Environment and Bioscience, College of Ocean Science and Technology, Korea Maritime and Ocean University

14:20~14:35 OP-10

Apparent digestibility coefficients of vegetable feed ingredients in diets for olive flounder (*Paralichthys olivaceus*)

Jin Choi[1], Md Mostafizur Rahman[1], Kyoung-Duck Kim[2], Kang-Woong Kim[2], Bong-Joo Lee[2], Hyon-Sob Han[2], and Sang-Min Lee[1]
Department of Marine Bioscience and Technology, Gangneung-Wonju National University[1]
Aquafeed Research Center, National Fisheries Research and Development Institute[2]

14:35~14:50 OP-11

Growth and Survival of Sea Cucumbers Ingested Fecal Solids from Recirculating Aquaculture System (RAS)

Feng Jin, U-Cheol Jeong, Ga-Hyun Kang, Jong-Kuk Choi, Byeong-Dae Choi[1] and Seok-Joong Kang*
Department of Marine Biology and Aquaculture, Gyeongsang National University
[1]Department of Seafood Science and Technology, Gyeongshang National University

14:50~15:00 Coffee Break

Chair : Kwang-Sik Choi (Jeju National University)

15:00~15:15 OP-12 [Invited Lecture]

Underutilized Crops: Fish Feed Prospects

Sayed Azam-Ali[1], Max Herriman[1], Giva Kuppusamy[1], Kumar Katya[2], Hyeonho Yun[2] and Sungchul C. Bai[2]

[1]Crops for the Future Research Centre, University of Nottingham, Malaysia

[2] Dept. of Marine Bio-materials and Aquaculture/ Feeds and Foods Nutrition Research Center, Pukyong Nat'l University, Rep. of Korea

15:15~15:30 OP-13

Taurine sparing effects of dietary sulfur amino acid supplementation juvenile rock bream (*Oplegnathus fasciatus*)

Fernando M. Ferreira*, Hyeonho Yun, Youngjin Park,

Gunhyun Park, Sera Choi, and Sungchul C. Bai

Dept. of Marine Bio-materials and Aquaculture/ Feeds and Foods Nutrition Research Center, Pukyong Nat'l University

15:30~15:45 OP-14

Effects of shrimp farming on local livelihoods and environment at the coastal area of Bangladesh

Rahman Md Mizanur[1]*, HyeonhoYun[2], and Sungchul C. Bai[2]

[1]Member of Bangladesh Civil Service (Economic) Cadre, Planning Commission, Ministry of Planning, Sher-e-Bangla Nagar, Dhaka, Bangladesh.

[2]Dept. of Marine Bio-materials and Aquaculture/ Feeds and Foods Nutrition Research Center, Pukyong Nat'l University, Rep. of Korea.

15:45~16:00 OP-15

Status of Aquaculture in Uganda

Rebecca W. Nambi[1]*, Jackson L. Wadanya[1], Sungchul C. Bai[2],

[1]Directorate of Fisheries Resources, Ministry of Agriculture, Animal Industry and Fisheries, Uganda

[2]Department of Fisheries Biology, Pukyong National University, Busan, Korea

16:00~16:15 OP-16

Kaptai Lake: a rich source of protein supply in Bangladesh

M. Moniruzzaman[1,3]*, Hyeonho Yun[3], K. B. Uddin[1], A. K. M. S. Islam[1],
S. S. Basak[1], Rahman Md Mizanur[2,3], Yahia Mahmud[1] and Sungchul C. Bai[3]
[1] Bangladesh Fisheries Research Institute, Riverine Sub-station, Rangamati, Bangladesh.
[2] Bangladesh Civil Service (Economic) Cadre, Ministry of Planning, Bangladesh
[3] Dept. of Marine Bio-materials and Aquaculture/ Feeds and Foods Nutrition Research Center, Pukyong Nat'l University, Rep. of Korea.

▣ Fisheries Resources · Ocean Environment
(Convention Hall, BEXCO 110)

Chair : Jin-Koo Kim (Pukyong National University)

13:50~14:05 OP-17 [General Lecture]

Variations of Sea surface elevation at Namchun Bay in Pusan with the passage of typhoons

Hong Chul-hoon and Sung-hyun Park
Division of Marine Production System Management, Pukyong National University

14:05~14:20 OP-18

Age and growth using external rings and chondrophore growth bands of *Mactra chinensis* (Bivalvia, Mactridae) in Korea

Jung-Yeon Kim[1]*, Han-Ju Kim[1], Kyung-Tae Lee[1], Chul-Woong Oh[1]
[1]Department of Marine Biology, Pukyong National University

14:20~14:35 OP-19

Size- and Fecudnity-dependent Mortality Formulation for Sailpin Sandfish (*Arctoscopus japonicus*) in the southwestern East Sea

Seungmok Ha[1]*, Heona Kim[2], Hyung-kee Cha[3],
Jae Hyeong Yang[3], and Sung Il Lee[4] and Sukgeun Jung[1]
[1]Division of Fisheries Science, Jeju National University
[2]Division of Mathematical and Computational Biology, Kyungpook National University
[3]Dokdo Fisheries Research Center, NFRDI
[4]Fisheries Resources and Environment Division, NFRDI

14:35~14:50 OP-20

Population structure and life history of *Neomysis awatschensis* (Crustacea: Mysidae) in Jeju Island, Korea

Jaeyong Bae[1], Sum Rho[2] and Wongyu Park[1]*
[1]Department of Maine Biology, Pukyong National University
[2]Center of Ornamentals, Reefs & Aquariums

14:50~15:00 Coffee Break

Chair : Jung-Hwa Choi (NFRDI)

15:00~15:15 OP-21

Vertical distribution of Cephalopod paralarvae around Jeju Island

Hwa Hyun Lee[1], Suam Kim[1], and Chul Park[2]

[1]Department of Marine Biology, Pukyong National University

[2]Department of Oceanography and Ocean Environmental Sciences, Chungnam National University

15:15~15:30 OP-22

Expressions of several reproduction-related genes are suppressed by a neurokinin B-related peptide in mature female Nile tilapia

Ye Hwa Jin, Jin Woo Park, Jung Hyun Kim, Woo Sik Kim,

Hyun Kyu Kim and Joon Yeong Kwon

Department of Aquatic Life Medical Sciences, Sunmoon University

15:30~15:45 OP-23

Relationship of site-specific maximum sustainable yield of turban shell (*Batillus cornutus*) with algal standing stock biomass along the coast of Jeju Island, Korea

Seok-Beom Hong[1]*, Seungmok Ha[1], Byungyeob Kim[1], Sukgeun Jung[1]

[1]College of Ocean Sciences, Jeju National University

▣ Fish Taxonomy & Ecology (Convention Hall, BEXCO 101)

Chair : Wan-Ok Lee (NFRDI)

15:00~15:20 OP-24

Differences in growth of young sea bass, *Lateolabrax japonicus* from eelgrass beds in Gamak and Yeoja bays of southern coast of Korea

Jin-Koo Kim[1*],Jung-Hwa Ryu[2],Jeong Bae Kim[3],Won-Chan Lee[3] and Hyong Chul Kim[3]
[1]Department of Marine Biology, Pukyong National University
[2]Ryujunghwa Marine Research Institute; [3]National Fisheries Research and Development Institute

15:20~15:40 OP-25

Reproductive ecology of an endemic Korean bitterling *Acheilognathus signifer* (Cyprinidae) between two populations

Hyeong-su Kim[1*], Hyun Yang[2], Jae-Geun Ko[3], Chi-Hong Kim[4], Jong-Young Park[1]
[1]Faculty of Biological Science and Institute for Biodiversity Research, Department of Biological Science, Chonbuk National University; [2]Institute of Biodiversity Research; [3]National Institute of Ecology; [4]Central Inland Fisheries Research Institute

15:40~16:00 OP-26

Population structure of the flathead mullet, *Mugil cephalus* in the Korean waters using morphological and molecular methods

Seung Eun Bae[1*],Jin-KooKim[1]and Li Chenhong[2]
[1]Department of Marine Biology, Pukyong National University
[2]Shanghai University

16:00~16:20 Coffee break

Chair : Jin-Koo Kim (Pukyong National University)

16:20~16:40 OP-27

Seasonal variation in species composition and abundance of larval and juvenile fish assemblages in the coastal water of Gadeok-do, Korea

Hyeon Ji Kim[1*], Jae Mook Jeong[1], Joo Myun Park[2], Sung Hoi Huh[2], and Gun Wook Baeck[1]
[1]Department of Marine Biology & Aquaculture/Institue of Marine Industry, Gyeonsang National University
[2]Department of Oceanography/Korea Inter-University Institute of Ocean Science, Pukyong National University

16:40~17:00 OP-28

Molecular phylogenetic relationships and evolution of the family Rajidae inhabiting the Korean waters

Dageum Jeong[1,2], Sung Kim[1,2], Choong-Gon Kim[2], Youn-Ho Lee[1,2]
[1]Marine Biology Department, University of Science and Technology
[2]Marine Ecosystem Research Division, Korea Institute of Ocean Science and Technology

▣ Fish Diseases (Convention Hall, BEXCO 102)

Chair : Kwan-Ha Park (Kunsan National University)

15:50~16:10 OP-29

The effects of Nickel on biochemical, immune and antioxidant responses in the abalone, Haliotis discus hannai during thermal stress

°Yong-Joo Cha, EunYoung Min, Jung Sick Lee*, Inn-Sil Kwak**, Jae Won Kim***, Ju-Chan Kang
Department of Aquatic life medicine, Pukyong National University
*Department of Aquatic life Medicine, Chonnam National University
**Faculty of Marine Technology, Chonnam National University
***Department of Marine Life-Science, Gangwon Provincial College

16:10~16:30 OP-30

The Kinetic analysis of oxytetracycline residues in abalone, *Haliotis discus hannai*

°NaYoung Kim[1], Kyoung-Mi Won[2], Hee-Sung Joo[1], BoYoung Jee[1], Myoung-Ae Park[1] And JinWoo Kim[3]
[1]Aquatic Life Disease Control Division, NFRDI, Busan 619-705, Korea
[2]Southeast Sea Fisheries Research Institute, NFRDI, Tongyeong 650-943, Korea
[3]Pathology Division, NFRDI

16:30~16:50 OP-31

Antibacterial effects of Chitosan-silver nanocomposites (CAgNCs)

°Dananjaya S.H.S[1], Jin-young Choi[1], Seung Beom Seo[2], Sung-Ju Jung[3], G.L. Godahewa[4], Jehee Lee[4] and Mahanama De Zoysa[1]
[1]College of Veterinary Medicine, Chungnam National University
[2]College of Life Sciences, Sejong University
[3]Department of Aqualife Medicine, Chonnam National University
[4]School of Marine Biomedical Sciences, Jeju National University

16:50~17:10 Coffee Break

Chair : Ki-Hong Kim (Pukyong National University)

17:10~17:30 OP-32

Identification of the causative agent of soft tunic syndrome of the sea squirt *Halocynthiaroretzi* on the southern coast of Korea

°Kyung-Il Park[a] , Kwan-Ha Park[a], Yun-Kyung Shin[b]
[a]Department of Aquatic Life Medicine, College of Ocean Science and Technology, Kunsan National University
[b]National Fisheries Research Institute

17:30~17:50 OP-33

Effect of water temperature on the mortality in *Megalocytivirus*-infected rock bream (*Oplegnathus fasciatus*) and development of protective immunity

°Myung-Hwa Jung[a,b], Myung-Joo Oh[a], Sung-Ju Jung[a,b]
[a]Department of Aqualife Medicine, Chonnam National University
[b] Aquatic Animal Hospital, Chonnam National University

▣ Fisheries Technology (Convention Hall, BEXCO 103)

Chair: Ho-young Jang (Kunsan National University)

13:00~13:20 OP-34

Fishing performance of the biodegradable tubular pots for catching the conger eel *Conger myriaster*

Seonghun Kim*, Seong-Wook Park, Kyounghoon Lee, Ji-hyun Lim, Hae-Sun Choi
[1]Fisheries System Engineering Division, NFRDI

13:20~13:40 OP-35

Design and Test of a Triple Topless Shrimp Trawl by Simulation software and Flume tank

OLUBIYI Olukayode Abiodun[1] and Chun Woo LEE[2]
[1]Department of Fisheries Physics, Pukyong National University
[2]Division of Marine Production System Management, Pukyong National University

13:40~14:00 OP-36

The development of a bycatch reduction device for offshore dredging and the performance estimation of model net

Doo-Jin HWANG[1]*, Ok-Sam KIM[1], Hyun-Chool SHIN[1], Eun-A YOON[1], Hae-Hoon PARK[2], Chang-Doo PARK[2], Gwang-Je PARK[3]
[1]Division of Marine Technology, Chonnam National University
[2]Fisheries System Engineering Division, National Fisheries Research Development Institute
[3]Samsin Fishing Gear

14:00~14:20 OP-37

Fishing experiment using a developed offshore dredge bycatch reduction device

Doo-Jin HWANG[1]*, Ok-Sam KIM[1], Hyun-Chool SHIN[1], Eun-A YOON[1], Hae-Hoon PARK[2], Chang-Doo PARK[2], Gwang-Je PARK[3]
[1]Division of Marine Technology, Chonnam National University
[2]Fisheries System Engineering Division, National Fisheries Research Development Institute
[3]Samsin Fishing Gear

14:20~14:40 Coffee Break

Chair: Jang-young Ahn (Jeju National University)

14:40~15:00 OP-38

Bandwidth Enhancement of a Broadband Ultrasonic Mosaic Transducer using 48 Tonpilz Transducer Elements with 12 Different Resonance Frequencies

Dae-Jae LEE

Division of Marine Production System Management, Pukyong National University

15:00~15:20 OP-39

Distributional characteristics of anchovy schools and the trial of anchovy species identification

Myounghee Kang[1*], Taeg Yun Oh[2], Young Il Seo[2]

[1]Department of Maritime Police and Production System, Gyeonsang National University

[2]Fisheries Resources Management Division, National Fisheries Research and Development Institute

15:20~15:40 OP-40

Distribution and Density of Coastal Fish in the Asan Bay, Korea, estimated Hydroacoustic Survey

Hyungbeen Lee[1,2], Donhyug Kang[1], Yangjae Im[3], Kyounghoon Lee[2]

[1]Maritime Security Center, Korea Institute of Ocean Science & Technology (KIOST)

[2]Fisheries System Engineering Division, National Fisheries Research & Development Institute (NFRDI)

[3]Fisheries Resources and Environment Division, National Fisheries Research & Development Institute (NFRDI)

15:40~16:00 OP-41

The *in situ* TS estimation of *Aurelia aurita* using 38 kHz and 120 kHz frequencies

Eun-A Yoon[1]*, Doo-Jin Hwang[1], Kyoung-Hoon Lee[2]

[1]Division of Marine Technology, Chonnam National University

[2]Fisheries System Engineering Division, National Fisheries Research Development Institute

16:00~16:20 Coffee Break

Chair: Suk-Jong Kim (Jeju National University)

16:20~16:40 OP-42

Growth and mortality of juvenile common octopus, *Octopus vulgaris* in individual and group type-shelters by *in-situ* follow-up survey with passive integrated transponder (PIT) tags

°Inyeong Kwon[1], Hyoyeong Lee[1], Sunjoo Moon[1], Taeho Kim[2]
[1]Department of Fisheries Science, Graduate School, Chonnam National University
[2]Division of Marine Technology, Chonnam National University

16:40~17:00 OP-43

Survival and growth rates of sea cucumber, *Apostichopus japonicus*(*S*elenka), shelter types for grow-out placed in flow-through seawater tank

°Sun-Joo Moon[1], Hyoyeong Lee[1], In yeong Kwon, Tae ho Kim[2]
[1]Departments of Fisheries Science, Graduate school, Chonnam National University
[2]Division of Marine Technology, Chonnam National University

17:00~17:20 OP-44

Characteristic of upwelling in the southeast region of the East Sea in July, 2013

Yong-Kyu Choi[1*], Hee-Dong Jeong[1], Jeong-Min Shim[1], Sang-Woo Kim[1], and Ki-Young Kwon[1]
[1]East Sea Fisheries Research Institute

17:20~17:40 OP-45

Growth change of *Sebastes inermis* by different wave length of LED light

Hyeon-Ok Shin[1*], Kyeong-Mi Kang[2], Min-A Heo[3], and Gyeom Heo[3]
[1]Division of Marine Production System Management, Pukyong National University
[2]Graduate School of Global Fisheries Science, Pukyong National University
[3]Department of Fisheries Physics, Graduate School, Pukyong National University

17:40~18:00 OP-46

Research Activity of ICES-FAO Working Group on the Fishing Technology & Fish Behaviour

Heui-Chun An
Aquaculture Industry Division, East Sea Fisheries Research Institute, National Fisheries Research & Development Institute

▣ Malacological (Convention Hall, BEXCO 106)

Chair : Kyung-Il Park (Kunsan National University)

14:00~14:20 OP-47

Physiology of the mussel *Mytilus galloprovincialis* two years after the *Hebei Spirit* oil spill

°Ludovic Donaghy[1], Hyun-Ki Hong[1], Heung-Sik Park[2], Moonkoo Kim[3], WonJoon Shim[3], and Kwang-Sik Choi[1]

[1]School of Marine Biomedical Science (BK21 PLUS), Jeju National University

[2]Pacific Ocean Research Center, Korea Institute of Ocean Science and Technology (KIOST)

[3]Oil and POPs Research Group, South Sea Institute of Korea Institute of Ocean Science and Technology (KIOST)

14:20~14:40 OP-48

Anesthetic effects and physiological responses of clove oil, lidocaine-HCl and tricaine methanesulphonate on Korean seawater shellfishes

°Soo Yeon Im[1], Hyun Woo Gil[2], In Bon Goo[3], Sang Gu Lim[3], Hyung Gyeon Han[3], Hee Jeong Kong[4], Bong Seok Kim[4], Cheol Min Ahn[4], In-Seok Park[2]

[1]Mechanical and Environment Research Division, Korea Marine Equipment Research Institute

[2]Division of Marine Environment and Bioscience, College of Ocean Science and Technology, Korea Maritime and Ocean University

[3]Inland Aquaculture Research Center, National Fisheries Research and Development Institute (NFRDI)

[4]Biotechnology Research Division, NFRDI

14:40~15:00 Coffee Break

Chair : Sang-Man Cho (Kunsan National University)

15:00~15:20 OP-49

Feasibility study of the submerged bag cultures for the Pacific oysters *Crassostrea gigas* on the southern coasts of Korea

°Qtae Jo[1], Jong-Cheol Han[1], Young-Baek Hur[1], Kee-Chae Cho[1], and Seong-Jae Jeong[2]

[1]Southeast Sea Fisheries Research Institute, NFRDI

[2]Fisheries System Engineering Division, NFRDI

15:20~15:40 OP-50

Optimum density for the best growth performance of the Pacific oysters *Crassostrea gigas* in the submerged bags installed in the southern coastal waters of Korea

°Jong-Cheol Han, Qtae Jo, Young-Baek Hur, and Kee-Chae Cho

[1]Southeast Sea Fisheries Research Institute, NFRDI

Poster Presentation (PP-1 ~ PP-241)

▣ Fisheries Processing/Uses (PP-1 ~ PP-55)

PP-1

Preliminary Study of Dancing Nudibranch (*Melibe* sp) Rearing During Winter Season

Aswi A. Rofiqoh[1], Zuliyati Rohmah[1,2], Seok-Joong Kang[3], and Byeong Dae Choi[1]*
[1]Dept. of Seafood Science and Technology, Gyeongsang National University, Korea
[2]Faculty of Biology Universitas Gadjah Mada, Yogyakarta 55281 Indonesia
[3]Dept. of Marine Biology and Aquaculture, Gyeongsang National University, Korea

PP-2

Effect of Dietary Ascidians' Tunic Carotenoids on Growth Performance of Sea-Reared Rainbow Trout (*Oncorhynchus mykiss*)

Zuliyati Rohmah[1,2], Aswi A. Rofiqoh[1], Jin-Soo Kim[1], Seok-Joong Kang[3], and Byeong Dae Choi[1]*
[1]Dept. of Seafood Science and Technology, Gyeongsang National University, Korea
[2]Faculty of Biology Universitas Gadjah Mada, Yogyakarta 55281 Indonesia
[3]Dept. of Marine Biology and Aquaculture, Gyeongsang National University, Korea

PP-3

Effect of Dietary Ascidians' Tunic Carotenoids on Polyunsaturated Fatty Acid (PUFA) Status of Sea-Reared Rainbow Trout (*Oncorhynchus mykiss*)

Zuliyati Rohmah[1,2], Aswi A. Rofiqoh[1], Jin-Soo Kim[1], Seok-Joong Kang[3], and Byeong Dae Choi[1]*
[1]Dept. of Seafood Science and Technology, Gyeongsang National University, Korea
[2]Faculty of Biology Universitas Gadjah Mada, Yogyakarta 55281 Indonesia
[3]Dept. of Marine Biology and Aquaculture, Gyeongsang National University, Korea

PP-4

Multifunctional Bioactive Peptides from Ark Shell (*Scapharca subcrenata*) by Peptic Hydrolysis

Young-Sook Cho[1], Chang-Bum Ahn[2], and Jae-Young Je[1]*
[1]Department of Marine Bio-Food Sciences, Chonnam National University
[2]Division of Food and Nutrition, Chonnam National University

PP-5

Chemical characteristics of Thailand salt-fermented fish sauces

In-Hak Jeong[1]*, Byoung-Mok Kim[2], and Sujinda Sriwattana[3]
[1]Division of Marine Food Science and Technology, Gangneung National University, Korea
[2]Korea Food Research Institute, Korea
[3]Facuty of Agro-Industry, Chiangmai University, Thailand

PP-6

Effects of *Styela clava* ethanolic extract on alcohol induced liver injury in Rats

Byoung-Mok Kim[1]*, Ki-Seung Sung[1], YoonSun Hwang[1], Jung-Min Ha[1], In-Hak Jeong[2], Young-Myoung Kim[3], and Dong-Soo Kim[1]
[1]Korea Food Research Institute
[2]Division of Marine Food Science and Technology, Gangneung National University
[3]Korea Food Engineer Association

PP-7

Changes in quality of fried rice with crab meat depending on the storage period and temperature

Ji-Hee Jung, Ji-Hoon Lim, Dong-Soo Kim, and Byoung-Mok Kim*
Korea Food Research institute, Korea

PP-8

Changes in quality of fried rice with red snow crab meat depending on the storage period and temperature

Ji-Hee Jung, Ji-Hoon Lim, Dong-Soo Kim, Byoung-Mok Kim*
Korea Food Research institute, Korea

PP-9

Quality changes in red snow crab sauce fermented during storage at 18℃

Ji-Hoon Lim[1], Jee-Hee Jeong[1], Dong-Soo Kim[1], Young-Myoung Kim[2], and Byoung-Mok Kim[1*]
[1]Korea Food Research Institute, Korea
[2]Korea Food Engineer Association, Korea

PP-10

Processing optimization of boiling, autolysis and enzyme hydrolysis for red snow crab extract using response surface methodology

Ji-Hoon Lim[1], Jee-Hee Jeong[1], Dong-Soo Kim[1], Young-Myoung Kim[2], and Byoung-Mok Kim[1]*

[1]Korea Food Research Institute, Korea

[2]Korea Food Engineer Association, Korea

PP-11

TRIF-dependent signaling pathway is involved in the anti-inflammatory effects of extracts from *Cordyceps militaris* mycelia fermented *Haliotis discus hannai* in RAW264.7 macrophages

Yon-Suk Kim[1], Jin-Woo Hwang[1], Gaurav Lodhi[1], Seong-Eun Kim[1], Young-Ki Han[1], Seo-Hee Kang[1]and Pyo-Jam Park[1]

[1]Department of Biotechnology, Konkuk University

PP-12

In vitro and *in vivo* anticancer effects of extracts from *Cordyceps militaris* fermented *Haliotis discus hannai* on skin cancer

Jin-Woo Hwang[1], Yon-Suk Kim[1], Gaurav Lodhi[1], Seong-Eun Kim[1], Young-Ki Han[1], Seo-Hee Kang[1]and Pyo-Jam Park[1]

[1]Department of Biotechnology, Konkuk University

PP-13

Extracts from *Undaria pinnatifida* fermented with *Ganoderma lucidum* mycelia exhibits anti-oxidant activities

Yon-Suk Kim[1], Jin-Woo Hwang[1], Gaurav Lodhi[1], Seong-Eun Kim[1], Young-Ki Han[1], Seo-Hee Kang[1]and Pyo-Jam Park[1]

[1]Department of Biotechnology, Konkuk University

PP-14

Fermentation with *Ganoderma lucidum* mycelia enhances the antioxidant effects of *Enteromorpha*

Young-Ki Han[1], Yon-Suk Kim[1], Jin-Woo Hwang[1], Gaurav Lodhi[1], Seong-Eun Kim[1], Seo-Hee Kang[1]and Pyo-Jam Park[1]
[1]Department of Biotechnology, Konkuk University

PP-15

Antifungal Activity of Seaweed Extracts against Human Harmful Yeasts

Hyo-Jung Kim, Sung-Hwan Eom, and Young-Mog Kim
Department of Food Science and Technology, Pukyong National University

PP-16

Antimicrobial-Resistance Profiles and Virulence Genes of *Vibrio parahaemolyticus* Isolated from Seawater in Wando Area

Tae-Ok Kim[1], In-Seon Eum[1], Sang-Man Jo[2], Jung-Kil Seo[1], Na-Young Lee[1], Seung-Yong Lim[1], Yong-Tae Kim[1], Jae-Geun Koo and Kwon-Sam Park[1]*
[1]Department of Food Science and Biotechnology, Kunsan National University
[2]Department of Marine Life and Aquaculture, Kunsan National University

PP-17

Elucidation of Antibacterial Mechanism of Chitosan Conjugates against Methicillin-resistant *Staphylococcus aureus*

Shin-Kook Kang[1]*, Sung-Hwan Eom[1], Jae Young Je[2] and Young-Mog Kim[1]
[1]Department of Food Science and Technology, Pukyong National University
[2]Department of Marine Bio-Food Sciences, Chonnam National University

PP-18

Antioxidant Activity and Lipid Peroxidation Inhibition Effect in Mackerel Model System of Abalone Viscera Hydrolysates

Soo Yeon Park[1], Joung-Youl Hwang[2], Jae-Young Je[1], Chang-Bum Ahn[1]
[1]School of Food Technology and Nutrition, Chonnam National University
[2]Korea Abalone Laboratory

PP-19

Antioxidant Activity of Sea Mustard (*Undaria pinnatifida*) Hydrolysates and Their Effect on Lipid Peroxidation in Mackerel Model System

Soo Yeon Park[1], Dong-Gi Choi[2], Jae-Young Je[1], Chang-Bum Ahn[1]
[a]School of Food Technology and Nutrition, Chonnam National University
[b]Green Seafood, Yeosu, Korea

PP-20

Effect of eco-friendly squid liver oil on the plasma lipids and adipose tissue weight of rats

Soo-Kyung Moon, Soo-Jung Lee, Nak-Ju Sung and Bo-Young Jeong
Department of Food and Nutrition/Institute of Agriculture and Life Science, Gyeongsang National University

PP-21

Effects of eco-friendly squid liver and grape seed oils on the plasma lipids and adipose tissue weight of rats fed high cholesterol

Soo-Kyung Moon, Soo-Jung Lee, Sung-Hee Kim, In-Soo Kim, Nak-Ju Sung and Bo-Young Jeong
Department of Food and Nutrition/Institute of Agriculture and Life Science, Gyeongsang National University

PP-22

Combination effects of eco-friendly squid liver and grape seed oils on the plasma lipids and adipose tissue weight of rats fed high cholesterol

Soo-Kyung Moon, Soo-Jung Lee, Sung-Hee Kim, In-Soo Kim, Nak-Ju Sung and Bo-Young Jeong
Department of Food and Nutrition/Institute of Agriculture and Life Science, Gyeongsang National University

PP-23

Antibacterial and synergistic effect of edible seaweed against *Enterococcus* species

Seung-Yong Kim[1], Sung-Hwan Eom[1], Myung-Suk Lee[2], Young-Mog Kim[1]
[1]Department of Food Science and Technology, Pukyong National University
[2]Department of Microbiology, Pukyong National University

PP-24

Bioactive peptides from *Porphyra yezoensis* and their anti-inflammatory activities

Hyun-Ah Lee*, In-Hye Kim, Jungim Lee, Eun-Young Kim, Youn-Hee Choi, and Taek-Jeong Nam
Institute of Fisheries Science, Pukyong National University

PP-25

Peptides from *Porphyra yezoensis* regulates proliferation in AGS cell

In-Hye Kim*, Hyun-Ah Lee, Jungim Lee, Eun-Young Kim, Youn-Hee Choi, and Taek-Jeong Nam
Institute of Fisheries Science, Pukyong National University

PP-26

Overexpression of BACE1 (β-secretase) in *E. coli*

Yeon-Ji Lee[1]*, Shuaiqi Tai[1], Jung-Kil Seo[1], Seung-Yong Lim[1], Na-Young Lee[1], Kwon-Sam Park[1], Jae-Geun Koo[1], Sun Joo Park[2] and Yong-Tae Kim[1]
[1]Department of Food Science and Biotechnology, Kunsan National University
[2]Department of Chemistry, Pukyong National University

PP-27

Screening of biological activities of jellyfish (*Aurelia aurita*) extracts

Hyo Jin Joo, Min Sung Park, Hye-Jin Go, and Nam Gyu Park
Dept. of Biotechnology, Pukyong National University

PP-28

Screening of biological activities of sea anemone (*Urticina crassicornis*) extracts

Ye Jin Lee, Ha Ri Kim, Ji Hee Heo, Hye-Jin Go, and Nam Gyu Park
Dept. of Biotechnology, Pukyong National University

PP-29

Effect of tuna eyeball oil on the inhibitory of atopic dermatitis

Yeon-Uk Choi[1]*, Bo-Kyeong Kang[1], Si-Woo Bark[1], Won-Min Pak[1], Bo-Ram Kim[1], Na-kyung Ahn[1], Koth-Bong-Woo-Ri Kim[2], Min-Ji Kim[2] and Dong-Hyun Ahn[1]

[1]Department of Food Science and Technology, Pukyong National University
[2]Institute of Fisheries Sciences, Pukyong National University

PP-30

Effects of Immersion Liquids with *Citrus junos* and *Prunus mume* Concentrate and High Hydrostatic Pressure on Shelf-life and Quality of *Scomber japonicus* during Refrigerated Storage

Won-Min Pak[1], Bo-Kyeong Kang[1], Si-Woo Bark[1], Bo-Ram Kim[1], Na-Kyung Ahn[1], Yeon-Uk Choi, Koth-Bong-Woo-Ri Kim[2], Min-ji Kim[2] and Dong-Hyun Ahn[1]
[1]Department of Food Science and Technology, Pukyong National University
[2]Institute of Fisheries Sciences, Pukyong National University

PP-31

Effect of *Myagropsis myagroides* ethnaol extracts on the inhibitory activity of atopic dermatitis

Na-Kyung Ahn[1]*, Bo-Kyeong Kang[1], Si-Woo Bark[1], Won-Min Pak[1], Bo-Ram Kim[1], Yeon-Uk Choi[1], Koth-Bong-Woo-Ri Kim[2], Min-Ji Kim[2] and Dong-Hyun Ahn[1]
[1]Department of Food Science and Technology, Pukyong National University
[2]Institute of Fisheries Sciences, Pukyong National University

PP-32

Anti-inflammatory effects of tuna eyeball oil on LPS-induced macrophages and mouse edema

Min-Ji Kim[1]*, Koth-Bong-Woo-Ri Kim[1], Bo-Kyeong Kang[2], Si-Woo Bark[2], Won-Min Pak[2], Bo-Ram Kim[2], Na-Kyung Ahn[2], Yeon-Uk Choi[2], and Dong-Hyun Ahn[2]
[1]Institute of Fisheries Sciences, Pukyong National University
[2]Department of Food Science and Technology, Pukyong National University

PP-33

Validation of a HPLC analysis for the detection of dieckol in phlorotannin extracts

Jiyoung Kim*, Suengmok Cho
Division of Metabolism and Functionality Research, Korea Food Research Institute

PP-34

Acute oral toxicity of a high-purity phlorotannin preparation in beagle dogs

Hyejin Yang[1*] and Suengmok Cho[1]
[1]Division of Strategy and Industry Research, Korea Food Research Institute

PP-35

Optimization of processing parameters for reducing the total arsenic content of the brown seaweed *Ecklonia cava* using response surface methodology

Minseok Yoon* and Suengmok Cho
Division of Strategic Food Research, Korea Food Research Institute

PP-36

Design of short antimicrobial peptides derived from the American Oyster Defensin (AOD) isolated from the American Oyster, *Crassostrea virginica*

Chang-won Lee[1], Han Ju Yu[1], Seung-Yong Lim[1], Na Young Lee[1], Yong-Tae Kim[1], Kwon-Sam Park[1], Jae-Geun Koo[1], Eun–Woo Lee[2] and Jung-Kil Seo[1]
[1]Department of Food Science and Biotechnology, Kunsan National University
[2]Department of Life Science and Biotechnology, Dongeui University

PP-37

Purification of an antimicrobial peptide from sea anemone (*Urticina crassicornis*) extract

Ha Ri Kim, Ji Hee Heo, Ye Jin Lee, Hye-Jin Go, and Nam Gyu Park
Dept. of Biotechnology, Pukyong National University

PP-38

Polymer-associated Particles Formation of Enzymatic Reacted Mackerel Oil by Gas Saturated Solution Process and Measure Active Compound Release at Different Solvent

A. S. M.Tanbirul Haque and Byung-Soo Chun*
Department of Food Science and Technology, Pukyong National University

PP-39

Mono-saccharides Production from Brown Seaweed (*S.japonica*) by Supercritical W ater Hydrolysis

SaravanaP.S[1], Hee-Chul Woo[2] and Byung-SooChun[1*]
[1] Department of Food Science and Technology, Pukyong National University
[2] Department of Chemical Engineering, Pukyong National University

PP-40

Quality characteristics of bread produced from wheat and Laver powder

Jung-Hee Yoo[1] and Jae-Geun Koo[2*]
[1]Dept. of Food & Nutrition, Kunsan National University
[2]Dept. of Food Science & Biotechnology, Kunsan National University

PP-41

Effects of molecular weight of porphyran Isolated from Laver, *Porphyra yezoensis*, on Lipid Metabolism in Rats Fed High Fat Diet

Jae-Geun Koo[1*], Jung-Sun Lee[2], Myung-Heon Lee[2]
[1]Dept. of Food Science & Biotechnology, Kunsan National University
[2]Dept. of Food & Nutrition, Hallym College

PP-42

Establishment of optimal mixing condition and preparation of seasoning sauce for sea rainbow trout jerky using response surface methodology (RSM) and Manufacture

Min-Soo Heu[1], Ki Hyun kim[2], Sang In Kang[2], Jun Kyu Lee[2],Yong Jung Kim[2], Sung Hwan Park[1], Hyun Ji Lee[1] and Jin-Soo Kim[2]
[1]Department of Food Science and Nutrition, Gyeongsang National University
[2]Department of Seafood Science and Technology, Gyeongsang National University

PP-43

Food Quality Characterization of Seasoning Sauce for Sea Rainbow Trout Jerky

Ki Hyun Kim[1], Sang In Kang[1],Jun Kyu Lee[1],Yong Jung Kim[1],Min-Soo Heu[2] and Jin-Soo Kim[1]
[1]Department of Seafood Science and Technology, Gyeongsang National University
[2]Department of Food Science and Nutrition, Gyeongsang National University

PP-44

Shelf-life of Seasoning Sauce for Sea Rainbow Trout Jerky

Sang In Kang[1], Ki Hyun kim[1], Jun Kyu Lee[1],Yong Jung Kim[1], Min-Soo Heu[2] and Jin-Soo Kim[1]
[1]Department of Seafood Science and Technology, Gyeongsang National University
[2]Department of Food Science and Nutrition, Gyeongsang National University

PP-45

Food quality characterization of commercial fish jerky

Ki Hyun kim[1], Sang In Kang[1],Jun Kyu Lee[1],Yong Jung Kim[1], Min-Soo Heu[2] and Jin-Soo Kim[1]
[1]Department of Seafood Science and Technology, Gyeongsang National University
[2]Department of Food Science and Nutrition, Gyeongsang National University

PP-46

Food quality characterization of commercial beef, pork and chicken jerkys

Yong Jung Kim[1], Ki Hyun kim[1], Sang In Kang[1],Jun Kyu Lee[1], Min-Soo Heu[2] and Jin-Soo Kim[1]
[1]Department of Seafood Science and Technology, Gyeongsang National University
[2]Department of Food Science and Nutrition, Gyeongsang National University

PP-47

Effect of low molecular weight chitooligosaccharides (1-3kDa) on osteoblast Differentiation on bone marrow stem cell

Pathum Chandika and Won-Kyo Jung*

*Department of Biomedical Engineering, and Center for Marine-Integrated Biomedical Technology (BK21 Plus) Pukyong National University

PP-48

Effects of starfish peptide on MC3T3-E1 proliferation, differentiation and mineralization through MAPK and Smad pathway

Van-Tinh Nguyen and Won-Kyo Jung*
*Department of Biomedical Engineering, and Center for Marine-Integrated Biomedical Technology (BK21 Plus) Pukyong National University

PP-49

Processings and Quality Characteristics of Boiled-Dried Anchovy *Engraulis japonica* Products with Green Tea Extract

Seong-Gwi Ryu[1]* and Kwang-Soo OH[2]
[1]Songmyung Fisheries Co.
[2]Dept. of Seafood Science and Technology / Institute of Agriculture and Life Science, Gyeongsang National University

PP-50

Processings and Quality Characteristics of the High Quality Accelerated Salt-fermented Anchovy *Engraulis japonica* Sauce

Seong-Gwi Ryu[1]*, So-Jeong Lee[2], and Kwang-Soo OH[2]
[1]Songmyung Fisheries Co.
[2]Dept. of Seafood Science and Technology / Institute of Agriculture and Life Science, Gyeongsang National University

PP-51

Processings and Quality Characteristics of the Instant Juvenile Anchovy *Engraulis japonica* Porridge Powder Product

Seong-Gwi Ryu[1]*, Seon-Geun Kim[2], and Kwang-Soo OH[2]
[1]Songmyung Fisheries Co.
[2]Dept. of Seafood Science and Technology / Institute of Agriculture and Life Science, Gyeongsang National University

PP-52

Preparation of powdered protease inhibitor from skipjack tuna (*Katsuwonus pelamis*) roe extract and its keeping quality

Sung Hwan Park[1], Hyun Ji Lee[1], Ye-Seul Lee[1], Sang In Kang[2], Hyung Jun Kim[3], Jin-Soo Kim[2] and Min Soo Heu[1]*

[1]Dept. of Food & Nutrition/Institute of Marine Industry, Gyeongsang National University
[2]Dept. of Seafood Science & Technology/Institute of Marine Industry, Gyeongsang National University
[3]Newport Imported Food Inspection Center, Busan Regional Food & Drug Administration

PP-53

Keeping quality and preparation of powdered protease inhibitor from yellowfin tuna (*Thunnus albacares*) roe extract

Hyun Ji Lee[1], Sung Hwan Park[1], Dong-Hui Kang[1], Sang In Kang[2], Jun Kyu Lee[2], Hyung Jun Kim[3], Jin-Soo Kim[2] and Min Soo Heu[1*]
[1]Dept. of Food & Nutrition/Institute of Marine Industry, Gyeongsang National University
[2]Dept. of Seafood Science & Technology/Institute of Marine Industry, Gyeongsang National University
[3]Newport Imported Food Inspection Center, Busan Regional Food & Drug Administration

PP-54

The effect of serine protease inhibitor fraction of skipjack tuna (*Katsuwonus pelamis*) roe extract on autolysis inhibition of minced muscle and surimi prepared from bastard halibut and mackerel

Hyung Jun Kim[1], Hyun Ji Lee[2], Sung Hwan Park[2], Sang In Kang[3], Jin-Soo Kim[3], and Min Soo Heu[2*]
[1]Newport Imported Food Inspection Center, Busan Regional Food & Drug Administration
[2]Dept. of Food & Nutrition/Institute of Marine Industry, Gyeongsang National University
[3]Dept. of Seafood Science & Technology/Institute of Marine Industry, Gyeongsang National University

PP-55

Serine protease inhibitor fraction from yellowfin tuna (*Thumus albacares*) roe extract; Autolysis inhibition of minced muscle and surimi from bastard halibut and mackerel

Hyung Jun Kim[1], Sung Hwan Park[2], Hyun Ji Lee[2], Sang In Kang[3], Yong Jung Kim[3], Jin-Soo Kim[3] and Min Soo Heu[2*]
[1]Newport Imported Food Inspection Center, Busan Regional Food & Drug Administration
[2]Dept. of Food & Nutrition/Institute of Marine Industry, Gyeongsang National University
[3]Dept. of Seafood Science & Technology/Institute of Marine Industry, Gyeongsang National University

▣ Aquaculture (PP-56 ~ PP-104)

PP-56

Changing temperature affects anesthetic effects and physiological stress responses in the marine medaka, *Oryzias dancena*

In-Seok Park[1]*, Young Ju Kim[1], Bong Seok Kim[2], Hee Jung Kong[2]
[1]Division of Marine Environment and Bioscience, Korea Maritime and Ocean University
[2]Biotechnology Research Division, National Fisheries and Development Institute

PP-57

Surface Functionalization of Solid Substrates Inspired by Mussel Byssus Cuticle

Suyeob Kim and Sung Min Kang*
Department of Marine Biomaterials & Aquaculture, Pukyong National University

PP-58

Effects of dietary inclusion of the various sources of additive on growth, feed utilization and challenge test of juvenile Korean rockfish (*Sebastes schlegeli*)

Hee Sung Kim[1]*, Sung Hwoan Cho[1], Mun-Gyeong Kwon[2]
[1]Division of Marine Environment and BioScience, College of Ocean Science and Technology, Korea Maritime University
[2]National Fisheries and Development Institute

PP-59

Substitution effect of fishmeal with tuna byproduct meal (TBM) in the diets on growth performance and body composition of juvenile abalone (*Haliotis discus*)

Ye Eun Kim[1]*, Sung Hwoan Cho[1], Pil Youn Kim[2], Mun Kwan Kim[2]
[1]Division of Marine Environment and BioScience, College of Ocean Science and Technology, Korea Maritime and Ocean University
[2]Ocean and fisheries Research Institute, Jeju Special Self-Governing Province

PP-60

Involvement of density, illumination intensity and tank color in blind-side hypermelanosis of cultured starry flounder, *Platichthys stellatus*

Duk-Young Kang[1]*, Won-Jin Kim[2], Hyo-Chan Kim[1], Young Jin Chang[2]
[1]West Sea Fisheries Research Institute, NFRDI
[1]Dep. Marine Bio-Materials & Aquaculture, College of Fisheries Sciences, PKNU

PP-61

Effects of the dietary protein levels and the protein to energy ratio in sub-yearling Persian sturgeon, *Acipenser persicus* (Borodin)

Mahmoud Mohseni[1, 2], Kumar Katya[2], Erfan Shahkar[2],
Hyeonho Yun[2], and Sungchul C. Bai[2*]
[1]International Sturgeon Research Institute, P.O. Box 41635-3464, Rasht, Iran
[2]Dept. of Marine Bio-materials and Aquaculture/ Feeds and Foods Nutrition Research Center, Pukyong Nat'l University, Rep. of Korea.

PP-62

Dietary magnesium hydrogen phosphate ($MgHPO_4$) as an alternative phosphorus source for growth and feed utilization of juvenile Israeli carp (*Cyprinus carpio*)

Tae-Hyun Yoon[1], Dong-Hoon Lee[2], Seung-Gun Won[1], Chang-Six Ra[1] and Jeong-Dae Kim[1]*
[1]College of Animal Life Science, Kangwon National University
[2]Gyeonggi Province Maritime and Fisheries Research Institute

PP-63

Isolation and characterization of multiple crystallin isoforms from mud loach (*Misgurnus mizolepis*)

Sang Yoon Lee[1], In Chul Bang[2] and Yoon Kwon Nam[1]*
[1]Department of Marine Bio-Materials & Aquaculture, Pukyong National University
[2]Department of Life Science and Biotechnology, Soonchunhyang University

PP-64

Expression analysis of gender- and/or maturation-related genes in abalone (*Haliotis discus hannai*)

Sang Yoon Lee, Seung Pyo Gong, Yoon Kwon Nam*
Department of Marine Bio-Materials & Aquaculture, Pukyong National University

PP-65

Embryonic stem cell-like activities of long-term cultured embryonic cell line from marine medaka (*Oryzias dancena*)

Jun Hyung Ryu[1], Dongwook Lee[1], Yoon Kwon Nam[1,2], Dong Soo Kim[1,2], Seung Pyo Gong[1,2]*
[1]Department of Fisheries Biology, Pukyong National University
[2]Department of Marine Biomaterials and Aquaculture, Pukyong National University

PP-66

Primary culture of radula tissue-derived cells in abalone, *Haliotis discus hannai*

Min Sung Kim[1], Jun Hyung Ryu[1], Yoon Kwon Nam[1,2], Seung Pyo Gong[1,2*]
[1]Department of Fisheries Biology, Pukyong National University
[2]Department of Marine Biomaterials and Aquaculture, Pukyong National University

PP-67

Embryonic stem cell-like activities of long-term cultured embryonic cell line from marine medaka (*Oryzias dancena*)

Jun Hyung Ryu[1], Dongwook Lee[1], Yoon Kwon Nam[1,2], Dong Soo Kim[1,2], Seung Pyo Gong[1,2]*
[1]Department of Fisheries Biology, Pukyong National University
[2]Department of Marine Biomaterials and Aquaculture, Pukyong National University

PP-68

Effect of different concentrations of the seaweed extract on the memory enhancement in mice

Ji-Young Choi[1], Md. Mohibullah[1], Yong-Ki Hong[1]*, Il Soo Moon[2], Yang-chun Kim[3] and Seon-Yeong Hwang[3]
[1]Department of Biotechnology, Pukyong National University
[2]Department of Anatomy, College of Medicine, Dongguk University
[3]Gijang Local Product Co

PP-69

Co-existence of neurotrophic and neuroinhibitory activities in the seaweed *Undaria pinnatifida*

Gabriel Tirtawijaya[1], Md. Mohibbullah[1], Il Soo Moon[2], Yong-Ki Hong[1]*
[1]Department of Biotechnology, Pukyong National University
[2]Department of Anatomy, Dongguk University College of Medicine

PP-70

Evaluating the regeneration of the sea cucumber *Apostichopus japonicus* gut upon feeding with various seaweeds

Pham Truong Giang[1] and Yong-Ki Hong[2]*
[1]KOICA-PKNU International Graduate Program of Fisheries Science
[2]Department of Biotechnology, Pukyong National University

PP-71

Differential neuritogenic activity of two edible brown macroalgae, *Undaria pinnatifida* and *Saccharina japonica*

Md. Abdul Hannan[1, 4], Seon-Yeong Hwang[3], Kyungyong Lee[3], Yang-Chun Kim[3], Yong-Ki Hong[1]* and Il Soo Moon[2]
[1]Department of Biotechnology, Pukyong National University
[2]Department of Anatomy, College of Medicine, Dongguk University
[3]Gijang Local Products Co. Ltd
[4]Department of Biochemistry and Molecular Biology, Bangladesh Agricultural University

PP-72

Potential of Agar-paper Waste extracted from Different Seaweed Raw Material for Bioethanol Production

Maria Dyah Nur Meinita[1*], Bintang Marhaeni[1], Yong-Ki Hong[2]
[1]Fisheries and Marine Department, Jenderal Soedirman University, Indonesia
[2] Biotechnology Department, Pukyong National University, South Korea

PP-73

Inhibitory activity of several seaweed extracts on rhizoid formation of the red alga *Porphyra suborbiculata*

Mehader Getachew and Yong-Ki Hong
Department of Biotechnology, Pukyong National University

PP-74

Induced changes in the proteomic profile of the Phaeophyta *Saccharina japonica* upon colonization of the hydrozoan, *Obelia geniculata*

Paulos Getachew, Yong-Ki Hong
Department of Biotechnology, Pukyong National University

PP-75

Edible Marine Algae Alleviates Hypoxia/reoxygenation Induced Oxidative Stress in Hippocampal Neurons

Md. Mohibbullah[1]*, Ji-YoungChoi[1], Jae-Suk Choi[3], InSoonChoi[3,4], Yong-KiHong[1] and Il Soo Moon[2]
[1]Department of Biotechnology, Pukyong National University,
[2]Department of Anatomy, College of Medicine, Dongguk University,
[3]RIS Center ,IACF, Silla University,
[4]Department of Biological Science, Silla University

PP-76

Physiological changes of Israel carp, *Cyprinus carpio nudus*, reared in water with Biofloc

Nam-eun Kim, Ah-ran Kim, Su-il Park, Do-hyung Kim
Department of Aquatic Life Medicine, Pukyong National University

PP-77

Effects and usefulness of biofloc technology in common carp (*Cyprinus carpio*) culture

Ah-Ran Kim, Nam-Eun Kim, Soo-Il Park, Do-Hyung Kim
Department of Aquatic Life Medicine, Pukyong National University

PP-78

The antibiotics efficacy study against *Edwardsiella tarda* in olive flounder, *Paralichthys olivaceus*

Yun-jin Lim* and Do-hyung Kim
Department of Fisheries Science Aquatic Life Medicine, Pukyong National University

PP-79

Development and validation of a real-time PCR assays for the rapid detection of *Streptococcus parauberis*

Luan Nguyen Thanh, Lim YunJin and Kim Do-Hyung
Department of Aquatic Life Medicine, College of Fisheries Science, Pukyong National University

PP-80

Genomic cloning and characterization of the Korean rose bitterling Rhodeus uyekii beta-actin gene

Ju Lan Kim, Eun-Ha Shin, Woo-Jin Kim, Hyung Soo Kim, Bong-Seok Kim,
Cheul Min An and Hee Jeong Kong*
Biotechnology Research Division, National Fisheries Research and Development Institute

PP-81

Targeted Erythrocyte Ablation in Tg[RBC:Gal4] Transgenic Zebrafish

Hee Jeong Kong[1]*, Jae-Ho Ryu[2], Ju Lan Kim[1], Woo-Jin Kim[1], Hyung Soo Kim[1], Cheul Min An[1], Jehee Lee[3] and Sang-Yeob Yeo[2]*
[1]Biotechnology Research Division, National Fisheries Research and Development Institute
[2]Department of Chemical and Biological Engineering, Hanbat National University
[3]Department of Chemical and Biological Engineering, Hanbat National University

PP-82

Stress responsible glucocorticoid receptors in medaka fish

Young Chang Sohn
Department of Marine Molecular Biotechnology, Gangneung-Wonju National University

PP-83

A novel dibasic residue repeat rich antimicrobial peptide from Pacific oyster, cgMolluscidin possess antibacterial and anticancer activity

Ji Young Moon[1], Eun-Hee Park[1], Jung-Kil Seo[3], Min Jeong Lee[2], Young-Ok Kim[1], Dong-Gyun Kim[1], Nam Gyu Park[2], Sang-Jun Lee[1], Chul Min An[1] and Bo-Hye Nam[1]
[1]Biotechnology Research Division, National Fisheries Research & Development Institute
[2] Department of Biotechnology, Pukyong National University
[3] Department of food science and biotechnology, Kunsan National University

PP-84

Antimicrobial histone H1-like protein from of olive flounder, *Paralichthys olivaceus* retain anticancer activity and antibacterial activity

Eun-Hee Park[1], Ji Young Moon[1], Jung-Kil Seo[3], Hye-Jin Go[2], Min Jeong Lee[2], Young-Ok Kim[1], Dong-Gyun Kim[1], Nam Gyu Park[2], Sang-Jun Lee[1], Chul Min An[1] and Bo-Hye Nam[1]

[1]Biotechnology Research Division, National Fisheries Research & Development Institute

[2]Department of Biotechnology, Pukyong National University

[3]Department of food science and biotechnology, Kunsan National University

PP-85

Effects of dietary supplementation of Barodon, an anionic alkali mineral complex, on growth performance, feed utilization, innate immunity and disease resistance in pacific white shrimp, *Litopenaeus vannamei*

Cho-Rong Lee[1] and Kyeong-Jun Lee[1]*

1Department of Marine Life Science, Jeju National University

PP-86

Vitamin C replacement by citrus by-product in diets for olive flounder (*Paralichthys olivaceus*)

You-Jeong Kim and Kyeong-Jun Lee*

Department of Marine Life Sciences, Jeju National University

PP-87

Optimal Feeding Rate Immature Korean Rockfish *Sebastes schlegeli* Fed Commercial Diet at High Water Temperature

Min-Gi Kim[1] and Kyeong-Jun Lee[1]*

[1]Department of Marine Life Sciences, Jeju National University

PP-88

Application of procured live-feed for Korean eel, *Anguilla japonica* pre-leptocephalus larvae

O-Nam Kwon[1], Jin-Chul Park[2] and Heum-Gi Park[2]*
[1]Marine Biology Center for Research and Education, Gangneung-Wonju National University
[2]Department of Marine Bioscience, Gangneung-Wonju National University

PP-89

Effects of water temperature on the physiological responses and hematological characteristics in growing of red spotted grouper, *Epinephelus akaara*

Hyun Chul Cho[1]*, Ji Eun Kim[1], Hea Ja Baek[1],
[1]Department of Marine Biology, Pukyong National University

PP-90

Functional analysis of Pacific oyster (*Crassostrea gigas*) thymosin: focus on antimicrobial activity

Bo-Hye Nam[1]*, Eun-Hee Park, Young-Ok Kim[1], Dong-Gyun Kim[1], Young Ju Jee[1], Cheul Min An[1], Jung-Kil Seo[2] and Nam Gyu Park[3]
[1]Biotechnology Research Division, National Fisheries Research and Development Institute
[2]Department of Food Science and Biotechnology, Kunsan National University
[3]Department Biotechnology, Pukyong National University

PP-91

Effect of carbon dioxide and temperature on oxygen consumption of red seabream *Pagrus major*

Sung-Yong Oh[1,2]* and Dongsung Kim[3]
[1]Marine Ecosystem Research Division, Korea Institute of Ocean Science and Technology
[2]Department of Marine Biology, Korea University of Science and Technology
[3]East Sea Branch, Korea Institute of Ocean Science and Technology

PP-92

Effect of salinity on survival, oxygen consumption and hematological response of greenling *Hexagrammos otakii*

Sung-Yong Oh[1,2]*
[1]Marine Ecosystem Research Division, Korea Institute of Ocean Science and Technology
[2]Department of Marine Biology, Korea University of Science and Technology

PP-93

Effect of feeding frequency on growth, feed consumption and blood physiology of Korean rockfish *Sebastes schlegelii* in sea cage

Sung-Yong Oh[1,2]* and Min-Suk Kim[1]
[1]Marine Ecosystem Research Division, Korea Institute of Ocean Science and Technology
[2]Department of Marine Biology, Korea University of Science and Technology

PP-94

Research for anti-HIV activity of AMD3100 analogue

In-Seung Jang, Seung-Hyun Jung and Sun-Joo Park
Dept. of Chemistry, Pukyong National University

PP-95

Inhibitory effect of dieckol on hypoxia-induced epithelial-to-mesenchymal transition of human colorectal cancer cell HT29

Seung-Hyun Jung, In-Seung Jang and Sun-Joo Park
Dept. of Chemistry, Pukyong National University

PP-96

The recurrent and localized blooms of harmful dinoflagellate *Cochlodinium polykrikoides* in the southeast coastal waters of Korea

Roksana Jahan[1], Song Ji Hyo[3], Kim Min Jung[2], Chang Hoon Kim[1,2,3]*
[1]Fisheries Science and Technology Centre
[2]Interdisciplinary Program of Biomedical Engineering
[3]Department of Marine Bio-materials & Aquaculture, Pukyong National University

PP-97

Resting cyst and life cycles of *Cochlodinium polykrikoides* in Korean Coastal waters

Roksana Jahan[1], Song Ji Hyo[3], Kim Min Jung[2] and Chang Hoon Kim[1,2,3]*
[1]Fisheries Science and Technology Centre
[2]Interdisciplinary Program of Biomedical Engineering
[3]Department of Marine Bio-materials & Aquaculture, Pukyong National University

PP-98

Defensive metabolite extraction in *Marphysa sanguinea* larvae

Jae-Gu Oh[2], Kyeong-Hun Kim[2], Jong-Soo Lee[3] and Chang-Hoon Kim[1,2,4*]

[1]Fisheries Science & Technology Centre

[2]Interdisciplinary Program of Biomedical Engineering, Pukyong National University

[3]Department of Seafood Science & Technology, Gyeongsang National University

[4]Department of Marine Bio-materials & Aquaculture, Pukyong National University

PP-99

A study of feed and feeding rate of *Marphysa sanguinea* juvenile during the early stage

Byung-Kwon Kim[2], Kyeong-Hun Kim[2], Sung-Kyun Kim[2], Ji-Il Kim[1] and Chang-Hoon Kim[1,2,3*]

[1]Fisheries Science & Technology Centre

[2]Interdisciplinary Program of Biomedical Engineering

[3]Department of Marine Bio-materials & Aquaculture, Pukyong National University

PP-100

Growth and survival rate of polychaete *Marphysa sanguinea* larvae on different grain size of substrates

Sung-Kyun Kim[2], Kyeong-Hun Kim[2], Byung-Kwon Kim[2], Ji-Il Kim[1] and Chang-Hoon Kim[123*]

[1]Fisheries Science & Technology Centre

[2]Interdisciplinary Program of Biomedical Engineering

[3]Department of Marine Bio-materials & Aquaculture, Pukyong National University

PP-101

Physio-Chemical Characteristics of Fecal Solids of Recirculating Aquaculture System for Renewal Feed Resource for Sea Cucumber

U-Cheol Jeong, Feng Jin, Ga-Hyun Kang, Jong-Kuk Choi, [1]Byong-dae Choi, and Seok-joong Kang[*]

Department of Marine Biology and Aquaculture, Gyeongsang National University

[1]Department of Seafood Science and Technology, Gyeongshang National University

PP-102

Absorption Rate of Organic Matter of Fecal Solids of Recirculating Aquaculture System Using the Sea Cucumber

U-Cheol Jeong, Feng Jin, Ga-Hyun Kang, Jong-Kuk Choi, [1]Byong-dae Choi, and Seok-joong Kang*
Department of Marine Biology and Aquaculture, Gyeongsang National University
[1]Department of Seafood Science and Technology, Gyeongshang National University

PP-103

Formation of Biofloc for Renewal Feed Resource for Sea Cucumber upon Concentration of Fecal Solids Released from RAS

Jong-Kuk Choi, U-Cheol Jeong, Feng Jin, Ga-Hyun Kang, [1]Byong-dae Choi, and Seok-joong Kang*
Department of Marine Biology and Aquaculture, Gyeongsang National University
[1]Department of Seafood Science and Technology, Gyeongshang National University

PP-104

Growth of Sea Cucumber Fed Biofloc Made from Fecal Solid of RAS

U-Cheol Jeong, Feng Jin, Ga-Hyun Kang, Jong-Kuk Choi, [1]Byong-dae Choi, and Seok-joong Kang*
Department of Marine Biology and Aquaculture, Gyeongsang National University
[1]Department of Seafood Science and Technology, Gyeongshang National University

▣ Fisheries Resources · Ocean Environment (PP-105~PP-133)

PP-105

Developing molecular markers from comparative mitogenomics of economic red algae *Pyropia* species

Sang-Rae Lee[1]*, Jee Eun Lee[1], Mi Sook Hwang[2,3], Seung-Oh Kim[2] and Dong-Soo Ha[2]
[1]Marine Research Institute, Pusan National University
[2]Aquatic Plant Variety Center, National Fisheries Research and Development Institute
[3]Seaweed Research Institute, National Fisheries Research and Development Institute

PP-106

Taxonomic entity and molecular monitoring of green algae blooms from Korea

Sang-Rae Lee[1]*, Jee Eun Lee[1], Jung Hyun Oak[1], Yoon Sik Oh[2], Eun Hee Bae[3] and Eun-Young Lee[3]
[1]Marine Research Institute, Pusan National University
[2]Division of Life Science, Gyeongsang National University
[3]National Institute of Biological Resource

PP-107

Phytochemical content and antioxidant activity of *Hypnea musciformes* from Bangladesh

S. M. Rafiquzzaman, Jong Min Lee, Gyuyou Noh, Geon-a Jo, Raju Ahmed, Dong Seop Kang and In Soo Kong*
Department of Biotechnology, Pukyong National University

PP-108

Age and growth of the damselfish (*Chromis notata*) in the Jeju Island

Han-Ju Kim[1]*, Han-Na Lee[1], In-Ok Lee[1], Chul-Woong Oh[1]
[1]Department of Marine biology, Pukyong National University

PP-109

New Records of two *Orientomysis* species and one *Nipponomysis* species (Crustacea: Mysida) from Korean Waters

Soo-Gun Jo* and Hyung-Seop Kim
Department of Marine Biotechnology, Kunsan National University

PP-110

Species Composition and Distributional Patterns of Macrobenthic Community on the Intertidal Rocky Shore near Ulju, East sea of Korea

Yun-Keun An[1]*, Ho-Seop Yoon[1], Su-Hyun Park[1], Ju-Won Kwak[2] and Sang-Duk Choi[1]
[1]Division of Marine Technology, Chonnam National University
[2] Division of Fisheries Resources Research Institute, Korea Fisheries Resources Agency

PP-111

Enhanced biomass by inositol and its effect in biochemical components of *Tetraselmis* sp.

Kichul Cho[1], Kil-Nam Kim[2], Seongwoon Rho[2], Tatsuya Oda[3], Daekyung Kim[2]*
[1]Korea University of Science & Technology, Korea
[2] Jeju center, Korea Basic Science Institute (KBSI), Jeju 690-756, Korea
[3]Division of Biochemistry, Faculty of Fisheries, Nagasaki University, Nagasaki 852-8521, Japan

PP-112

Effective RNA-silencing strategy of Lv-MSTN/GDF11 gene and its effects on the growth in shrimp, *Litopenaeus vannamei*

Ji-Hyun Lee[1]*, Jalal Momani[2]*, and Hyun-Woo Kim[12]
[1]Interdisciplinary program of Biomedical Engineering, Pukyong National University
[2]Department of Marine Biology, Pukyong National University

PP-113

Growth and living depth of young mud shrimp (*Upogebia major*) in The Boryeong tidal flat in South Korea

Jae-Hee Song*, Hyun-Mi Ahn, Yoon-Seok Choi, Sang-Pil Yoon,
Kwang-Jae Park, Sang-Ok Jeong and Kyoung-Ho An
Tidal Flat Research Institute, National Fisheries Research and Development Institute

PP-114

Phenology of host *Chondrus ocellaus* with filamentous green endophytes infection

Chan-song Kim[1], Gyu Sang Kang[1], Han Gil Choi[2],Young Sik Kim[1]* and Ki Wan Nam[3]
[1]Kunsan National University, [2]Wonkwang University,
[3]Pukyong National University

PP-115

Anti-inflammatory effect of byproducts from Haliotis discus hannai in Raw 264.7 cells

Ho-Seok Rho[1], Jung-Ae Kim [2,3], and Chang-Suk Kong [3*]
[1] Production support team, Marine Biotechnology Research Institute, JeollaNamdo 537-807, **Korea**
[2] Department of Food and Nutrition, College of Medical and Life Science, Silla University
[3] Department of Food and Nutrition, Silla University

PP-116

Molecular characterization of Korean jellyfish and implications for their species identities

Yu Won Bae[1], Ruoyu Guo[1], Boopathi Thangavelu[2], Ponmani Thangaraj[2], Jinho Chae[3], Chang-hoon Han[4], Won Duk Yoon[4] and Jang-Seu Ki[1*]
[1]Department of Life Science, Sangmyung University
[2]Institute of Life Science, Sangmyung University
[3]Korean environmental Research Center for Hydrosphere
[4]Fishery and Ocean Information Division, NFRDI

PP-117

Studies on biomass of marine microalgae, *Nanochloropsis salina*

Han-Joo Lee[1]*, Young-Jae I[1], Do-Guen Lee[1], Seung-Jun Park[1],Jong-Seo Seon[1],Sang-Mok Jung[1], and H.W Shin[1]
[1]Department of life science biotechnology, Soonchunhyang University

PP-118

Asymmetric distribution of mitochondria and unequal cell divisions in the chordate *Halocynthia roretzi*

Yong Han Baek, Ji Won Lee and Gil Jung Kim
Department of Marine Molecular Biotechnology, Gangneung-Wonju National University

PP-119

New record of the Marlin sucker, *Remora osteochir* (Perciformes: Echeneidae) from Jeju Island, Korea

Se Hun Myoung and Jin-Koo Kim*
Departme Department of Marine Biology, Pukyong National University

PP-120

Community structure of macrobenthic assemblages in Uljin marine ranching area, Korea

Han-Na Lee[1*], In-Soo Seo[2], Chul-Woong Oh[1], Jung-Pyo Hong[3], Jung-Yeon Kim[1] and Seong-Eun Kim[1]
[1]Department of Marine Biology, Pukyong National University
[2]Korea Benthos Research Center Co.
[3]Resources Management Head guarter, Korea Fisheries Resources Agency

PP-121

Introduction of Marine Fish Resource Bank of Korea (MFRBK)

Jin-Koo Kim[1*], Jung-Hwa Ryu[2], Soo-Jeong Lee[1], Young-Sun Song[1], Se-Hun Myoung[1], Seung-Eun Bae[1], Hyo-Jae Yu[1], Woo-Jun Lee[1] and Sang-Yun Han[1]
[1]Department of Marine Biology, Pukyong National University
[2]Ryujunghwa Marine Research Institute

PP-122

Distribution Patterns of Polychaete Assemblages and Benthic Quality Status estimated by AMBI in Jindo-Jejudo Subtidal areas

Kwang-Bae Kim*, Jae-Hoon Cha, Dong-Young Kim, Ji-Na Song, Doo-Chan Um and Chul Hwui Kwoun
Land Ocean Environment Co Ltd. D-1301, Digital Empire Bldg.

PP-123

Treatment of fishery waste by *Bacillus licheniformis* TK3-Y possessing multiple enzymes

Kyeong Hwan Kang, Jang Ho Kang and Joong Kyun Kim
Department of Biotechnology and Bioengineering, Pukyong National University

PP-124

Fertilizing value of the liquid fertilizer produced by biodegradation of fish- wastewater in plant scale

Kyeong Hwan Kang, Jang Ho Kang, Joong Kyun Kim
Department of Biotechnology, Pukyong National University

PP-125

Biodegradation of Brown-Seaweed Powder with Improved Solubility under of Optimal Condition

Da Som Kang, Joong Kyun Kim
Department of biotechnology, Pukyong National University

PP-126

Improved Brown Seaweed Polysaccharides Hydrolyzing Enzyme Ability by Chemical Mutation

Da Som Kang, Sung Eun Kim, and Joong Kyun Kim
Dept. of Biotechnology, Pukyong National University

PP-127

Production of Bioactive Compounds from Mackerel Wastewater by Mixed Culture

Hyun Yi Jung, Joong Kyun Kim
Department of Biotechnology, Pukyong National University

PP-128

Production of Reducing Sugars from Brown-Seaweed Polysaccharides by Mixed Culture

Hyun Yi Jung, Hee Jin Lee and Joong Kyun Kim
Department of Biotechnology, Pukyong National University

PP-129

Screening and investigation of biofouling attractants

Seul-Gi Kang[1]*, Gwang-Tae Kim[1], Eun-Ji Han[1], Jin-Hee Kim[1], Young-Eun Bang[1], Hye-Jin Do[1], H.W-Shin[1], and In–Bong Lee[2]
[1]Department of Life Science Biotechnology, Soonchunhyang University
[2]Greenkorea CO., LTD.

PP-130

Development of chemoattractant coating for marine organisms

Gwang-Tae Kim[1]*, Seul-Gi Kang[1], Eun-Ji Cho[1], Su-Jin Song[1], Yu-Jeong Lee[1], Ji-Young Jeon[1], H.W Shin[1], and In-Bong Lee[2]
[1]Department of Life Science Biotechnology, Soonchunhyang University
[2]Greenkorea CO., LTD.

PP-131

Non-toxic antifouling coatings with silicone polyurea

A-Reum Kim[1*], Ji-Su Son[1], Dae-Kwon Song[1], Jae-Hyuk Jeon[1], Hoon-Ju Lee[1], Sang-Mok Jung[1], H.W Shin[1] and Chu-Youl Kang[2]
[1]Department of Life Science Biotechnology, Soonchunhyang University
[2]DURACHEMIE CO., LTD.

PP-132

Study on antifouling activity of new AF agents

A-Reum Kim[1]*, Dong-Yeop Han[1], Young-Ho Seo[1], Jong-Min Lee[1], Eun-Ji Kim[1],Sang-Mok Jung[1], H.W Shin[1], and Ju-Yeol Kang[2],
[1]Department of Life Science Biotechnology, Soonchunhyang University
[2]DURACHEMIE CO., LTD.

PP-133

Study on Water Quality of Oyster farming waters in Goseong Bay

Joo-Eun Woo, Woo-Geon Jeong, Sand-Man Cho[1]

Department of Marine Biology & Aquaculture, Gyeongsang National University

[1]Department of Aquaculture and Aquatic science, Kunsan National Unoversity

▣ Fish Taxonomy & Ecology (PP-134 ~ PP-146)

PP-134

Device for repelling aquatic creature and array comprising the same

Youn Choi*, Heung-Heon Lee and Jeong-kyu Oh
Department of Marine Biotechnology, Kunsan National University

PP-135

Biodiversity of fishes in the north eastern Yellow Sea, Korea

Choong-Hoon Jeong[1]*, Yang-Jae Im[2] and Kyung-Nam Han[3]
[1]Ocean Science & Technology Institute, [3]Department of ocean sciences, Inha University
[2]West Sea Fisheries Research Institute, National Fisheries Research & Development Institute

PP-136

First record of the carangid fish *Scomberoides tol* (Perciformes : Carangidae) from Korea

Seung-ho Choi[1], Heung-heon Lee[2], Yon Choi[3]
[1] Korean Association for Conservation of Freshwater Fish; [2]Institute of Biodiversity Research Center;
[3]Faculty of Marine Life Science, Kunsan National University

PP-137

A microscopic study on the egg envelope ofan endemic Korean fish, *Coreoleuciscus splendidus*

Jong-Sung Park[1*], Jae-Goo Kim[1], Chi-Hong Kim[2]and Jong-young Park[1]
[1]Department of Biological Science and Institute for Biodiversity Research, College of Natural Sciences, Chonbuk National University; [2]Central Inland Fisheries Research Institute

PP-138

The structure of peripheral olfactory organ in Korean amphibious fish, *Periophthalmus modestus* (Pisces, Gobiidae)

Hyun-Tae Kim[1*], Yong-Joo Lee[2], Jong-Young Park[1]
[1]Department of Biological Sciences, College of Natural Sciences, and Institute for Biodiversity Research, Chonbuk National University; [2]Chonju National University of Education

PP-139

Structure of egg envelope and oogenesis of *Gobiobotia brevibarba* (Cyprinidae)

Wung Sun Choi[1], Jong Young Park[1], Chi Hong KIm[2]
[1]Faculty of Biological Science and Institute for Biodiversity Research, College of Natural Sciences, Chonbuk National University; [2]Central Inland Fisheries Research Institute

PP-140

Freshwater fish assemblages according to different geographic regions in Korea

Wan-Ok Lee[1*], Seung-Yoon Jung[1], Kyeong-Hwan Kim[1], and Mi-Young Song[1]
[1]Inland Fisheries Research Institute, National Fisheries Research & Development Institute

PP-141

An undescribed snailfish, *Lethotremus* sp. (Scorpaeniformes: Cyclopteridae), from Jeju Strait, Korea

Soo Jeong Lee* and Jin-Koo Kim
Department of Marine Biology, Pukyong National University

PP-142

Phylogeographic relationship of the family Odontobutidea in East Asia

Gun young Lee, Jong Yeon Park, Jae Hoon Kim, In Chul Bang*
Life Science and Biotechnology, Sooncheonhyang University

PP-143

New Record of the Stone cokscombs *Alectrias alectrolophus* (Perciformes: Stichaeidae) from Gangneung-si, Korea

Hyun-Geun Cho[1*], Seon-Man Kweon[1], Byung-Jik Kim[2], Seul-Yi[1]
[1]Division of Animal Resources, National Institute Biological Resources
[2]Wildlife Genetic Resources Center, National Institute Biological Resources

PP-144

Diet composition of *Collichthys lucidus* (Richardson, 1844), in the Han River estuary, Korea

Su-Whan Chung, Byung-Gi Kim, Ji-Hye Kim, Min-Gyu Kim and Kyung-Nam Han*
Department of ocean sciences, Inha University

PP-145

Age and growth of redlip mullet (*Chelon haematocheilus*) in the Han River estuary, Korea

Min-Gyu Kim, Jong-Wook Kang , Byung-Pyo Kim, Ji-Hye Kim, Su-Whan Chung, Keon-Sic Choi and Kyung-Nam Han
Department of Ocean Sciences, Inha University

PP-146

The correlation between bioaccumulation and pattern of stress related genes expression of black sea bream(*Acanthopagrus schlegeli*) by cadmium exposure.

Yong Kim, Ho-Ra Park, Won-Jun Yeo, Sun-Sik Lee, and Kyung-Nam Han*
Department of Ocean Science, Inha University

▣ Fish Diseases (PP-147 ~ PP-214)

PP-147

Isolation and Characateristics of *Aeromonas sobria* from Cultured Mud loach (*Misgrurunus anguillicautatus*)

°Sung-Woo Park[1], Dong-Wan Kim[2], Bon-Hyung Koo[1]
[1]Dept. Aquatic Life Med., Kunsan Univ., [2]Tongkyung Microbiology Co.

PP-148

Pathogenic potentials of two sibling anisakid nematodes:*Anisakis simplex* (sensustricto) *and Anisakis pegreffii*

°Chan-Hyeok Jeon, Seong-Wi, Jeong-Ho Kim
Department of Marine Bioscience, Gangneung-Wonju National University

PP-149

Residues of Oxytetracycline and Neomycin Mixtures in Olive Flounder (*Paralichthys olivaceus*) Following immersion.

°Seung Min Kim, Lyu Jin Jun, Hyun Kyung Park, Myung Lip Lee, Da Won Lee, and Joon Bum Jeong
School of Marine Biomedical Sciences, College of Ocean Science& Marine and EnvironmentalResearch Institute, Jeju National University

PP-150

Real-time PCR assay using *groEL* gene for the detection and quantification of *Vibrio alginolyticus* from shellfish and shrimp

Raju Ahmed, S. M. Rafiquzzaman, Jong Min Lee, Gyuyou Noh, Geon-a Jo, Dong Seop Kang and In-Soo Kong*
Department of Biotechnology, Pukyong National University

PP-151

Effect of ^{60}Co gamma Irradiation on growth rate and environment tolerance of Disk abalone, *Haliotis discus discus*.

°Min-Seok Jwa[1], Hye-na Moon[2], Jin Namgung[2], Hye-rim Yang[2] and In-kyu yeo[2]
[1]Jeju special self-governing province Ocean and Fisheries Research Institute
[2]Department of Marine life Science, Jeju National University

PP-152

Isolation and characterization of lytic bacteriophage (PAsm-1) against *Aeromonas salmonicida mosoucida*

°Maheswaran Easwaran[1], Jin-young Choi[1],G.L. Godahewa[2],Hyun-Jin Shin[1],Jehee Lee[2] and Mahanama De Zoysa[1*]
[1*]College of Veterinary Medicine, Chungnam National University
[2]Department of Marine Life Sciences, Jeju National University

PP-153

Distribution of MIC value for quinolones in *Streptococcus parauberis* isolated from diseased fish in Korea

°JiWoong Jin, Hye Sung Choi, Sung Hee Jung and MyoungSug Kim
Pathology Division, National Fisheries Research and Development Institute

PP-154

Lepeophtheirus elegans (Caligidae), a serious pest of cultured Korean rockfish *Sebastes schlegelii* (Hilgendorf, 1880) (Sebastidae)

°B. A. Venmathi Maran*, Sung-Yong Oh, Hee Jung Choi, and Jung-Goo Myoung
Marine Ecosystem Research Division, Korea Institute of Ocean Science & Technology

PP-155

Preparation of RSIV recombinant proteins and a rabbit polyclonal antibody againstrock bream Immunoglobulin for serological test

°Jeong Su Park[1], Hyoung Jun Kim[2],Minchul Choi[3],Haeng Lim Lee[1], Se Ryun Kwon[1*]
[1]Department of Aquatic Life Medical Sciences, SunmoonUniversity
[2]National Fishery Products Quality Management Services, Main Office
[3]Incheon Fisheries Research Institute

PP-156

Molecular profile and transcriptional analysis of a potent antimicrobial agent, identified from rock bream (*oplegnathus fasciatus*).

°Don Anushka Sandaruwan Elvitigala[1,2], and Jehee Lee[1,2]
[1]Department of Marine Life Sciences, School of Marine Biomedical Sciences, Jeju National University
[2]Fish Vaccine Development Center, Jeju National University

PP-157

C-type lectin from sea horse(*Hippocampus Abdominalis*); molecular characterization and transcriptional profiling

°Eunyoung jo, Wan Qiang, Don Anushka Sandaruwan Elvitigala and Jehee Lee
Department of Marine Life Science, School of Biomedical Sciences, Jeju National University

PP-158

Genomic identification,molecular insights and transcriptional regulation of complement C1r counterpart from rock bream (*Oplegnathus fasciatus*)

°G. I. Godahewa, S. D. N. K. Bathige and Jehee Lee
Department of Marine Life Science, School of Biomedical Sciences, Jeju National University

PP-159

Tissue specific expression analysis and molecular insights of the iron binding blood plasma glycoprotein in rock bream (*Oplegnathus fasciatus*)

°G. I. Godahewa[1],Mahanama De Zoysa[2] and Jehee Lee[1]
[1]Department of Marine Life Science, School of Biomedical Sciences, Jeju National University
[2]College of Veterinary Medicine, Chungnam National University

PP-160

Molecular insights into an iron regulator, identified from disk abalone (*Haliotis discus discus*).

°H.M.L.P.B. Herath, Don Anushka Sandaruwan Elvitigala, and Je hee Lee
Department of Marine Life Sciences, School of Marine Biomedical Sciences, Jeju National University

PP-161

Molecular characterization and immune response against viral hemorrhagic septicemia virus infection of caveolin 1 in disk abalone, *Haliotis discus discus.*

°H.M.V.Udayantha[1], S.D.N.K. Bathige[1], Yucheol Kim[1], Thanthrige Thiunuwan Priyathilaka[1], Uduwarageltan Lakshan perera[1], Hyowon Kim[1],Hyungbok Jeong[2] , Seongil Kang[2], Changnam Jin[2], Jehee Lee[1]and Bongsoo Lim[2]

[1]Department of Marine Life Sciences, School of Marine Biomedical Sciences, Jeju National University

[2]Fish Vaccine Research Center, Jeju Self-Governing province

PP-162

MOLECULAR PROFILING OF A PUTATIVE SIMILITUDE OF OXIDATIVE DAMAGE REPAIRER, IDENTIFIED FROM ROCK BREAM *Oplegnathus fasciatus*.

°Hyowon Kim[1], Don Anushka Sandaruwan Elvitigala,Yucheol Kim, Seongdo Lee, Thanthrige Thiunuwan Priyathilaka[1], U. I. L. Perera, Hyungbok Jeong[2] , Seongil Kang[2], Changnam Jin[2,] Bongsoo Lim[2] and Jehee Lee[1]

[1]Department of Marine Life Sciences, School of Marine Biomedical Sciences, Jeju National University

[2] Fish Vaccine Research Center, Jeju Self-Governing province

PP-163

Serine/threonine protein kinase ULK1 gene from rock bream (*Oplegnathus fasciatus*): molecular characterization and potential role in immune response against bacterial and viral pathogens

°J. D. H. E. Jayasinghe, G. I. Godahewa and Jehee Lee

Department of Marine Life Sciences, School of Marine Biomedical Sciences, Jeju National University

PP-164

Molecular characterization of ubiquitin-conjugation enzyme (E2) in rock bream (*Oplegnathus fasciatus*) and its immune response

°J. D. H. E. Jayasinghe , G. I. Godahewa and Jehee Lee

Department of Marine Life Sciences, School of Marine Biomedical Sciences, Jeju National University

PP-165

Molecular characterization and expression analysis of tumor necrosis factor promoter polymorphism TNF 2 from Seahorse (*Hippocampus abdominalis*)

°Jiyeon Ko, Wan Qiang, S.D.N.K. Bathige, and Jehee Lee
Department of Marine Life Science, Jeju National University

PP-166

Molecular genomic identification and spatial expression analysis of *Rab-5C-like* gene from rock bream (*Oplegnathus fasciatus*)

°M. S. Mothishri, Navaneethaiyer Umasuthan, William Shanthakumar Thulasitha, Jehee Lee
Department of Marine Life Sciences, School of Marine Biomedical Sciences, Jeju National University

PP-167

Functional characterization of *β defensin* from rock bream *Oplegnathus fasciatus*

°M. S. Mothishri, Navaneethaiyer Umasuthan, William Shanthakumar Thulasitha, Jehee Lee
Department of Marine Life Sciences, School of Marine Biomedical Sciences, Jeju National University

PP-168

CLONING AND CHARACTERIZATION OF FERRITIN-L SUBUNITS FROM SEAHORSE (*Hippocampus abdominalis*)

°Minyoung Oh, Eunyoung Jo, Wan Qiang and Jehee Lee
Department of Marine Life Science, Jeju National University, Jeju National University

PP-169

Insights into the genomic evolution of a teleostean kinase in Toll-like receptor signaling: Flagellin induces rock bream (*Oplegnathus fasciatus*) *IRAK4* transcripts

°Navaneethaiyer Umasuthan, S.D.N.K. Bathige, William Shanthakumar Thulasitha, Jehee Lee
Department of Marine Life Sciences, Jeju National University

PP-170

Exon-intron structure and promoter of a teleost *MyD88* that responds to flagellin-inoculation

°Navaneethaiyer Umasuthan, S.D.N.K. Bathige, William Shanthakumar Thulasitha, M. S. Mothishri , Jehee Lee
Department of Marine Life Sciences, Jeju National University

PP-171

Genomic organization of a membrane form *TLR5* from *Oplegnathus fasciatus* rock bream (*RbTLR5M*): Basal expression and flagellin-mediated induced expression profiles in immune relevant tissues

°Navaneethaiyer Umasuthan, S.D.N.K. Bathige, William Shanthakumar Thulasitha, Jehee Lee
Department of Marine Life Sciences, Jeju National University

PP-172

Characterization of bactericidal permeability-increasing protein from big belly seahorse (*Hippocampus abdominalis*) and expression profiling after bacterial challenge

°Qiang Wan, Minyoung Oh, Jiyeon Ko, Eunyoung Jo and Jehee Lee
Marine molecular genetics Laboratory, Department of Marine Life Science, College of Ocean Science, Jeju National University

PP-173

Molecular cloning of plasma kallikrein-like gene from big belly seahorse (*Hippocampus abdominalis*), a novel type of lectin involved in antibacterial defense

°Qiang Wan, Minyoung Oh, Jiyeon Ko, Eunyoung Jo and Jehee Lee
Marine molecular genetics Laboratory, Department of Marine Life Science, College of Ocean Science, Jeju National University

PP-174

A member of serine protease inhibitor from rock bream, *Oplegnathus fasciatus* involved in immune responses

°S.D.N.K. Bathige, G.I. Godahewa, Navaneethaiyer Umasuthan, and Jehee Lee
Department of Marine Life Sciences, School of Marine Biomedical Sciences, Jeju National University

PP-175

Molecular Cloning and Tissue Specific Expression of serine/threonine protein phosphatase PP1-β catalytic subunit (*PPP1CB*) in Rock bream, *Oplegnathus fasciatus*

°Seongdo Lee[1], Yucheol Kim[1], Thanthrige Thiunuwan Priyathilaka[1], U. I. L. Perera [1], Hyowon Kim[1], Hyungbok Jeong[2], Seongil Kang[2], Changnam Jin[2], Jehee Lee[1] and Bongsoo Lim[2]
[1]Department of Marine Life Sciences, School of Marine Biomedical Sciences, Jeju National University
[2]Fish Vaccine Research Center, Jeju Self-Governing province

PP-176

Molecular characterization of arginine kinase (AK) counterpart from disc abalone (*Haliotis discus discus)*

°Thanthrige Thiunuwan Priyathilaka[1*], Yucheol Kim[1], Hyung-Bok Jeong[2], Seong-il Kang[2], Changnam Jin[2], Seongdo Lee[1], Hyowon Kim[1], Jehee Lee[1,2] and Bong-Soo Lim[2]
[1]Department of Marine Life Science, School of Marine Biomedical Sciences, Jeju National University
[2]Fish Vaccine Research Center, Jeju Special Self-Governing Province

PP-177

Evidences for the involvement of a member of protein kinase in rock bream (*Oplegnathus fasciatus*) immunity: Bioinformatics and expression analysis

°U. I. L. Perera[1], S. D. N. K. Bathige[1], Yucheol Kim[1], Thanthrige Thiunuwan Priyathilaka[1], Hyowon Kim[1], Hyungbok Jeong[2], Seongil Kang[2], Changnam Jin[2], Jehee Lee[1] and Bongsoo Lim[2]
[1]Department of Marine Life Sciences, School of Marine Biomedical Sciences, Jeju National University
[2] Fish Vaccine Research Center, Jeju Self-Governing province

PP-178

A CXC chemokine from *Oplegnathus fasciatus*: Molecular characterization and mRNA expressional profile under pathological conditions

°William Shanthakumar Thulasitha, Navaneethaiyer Umasuthan, Jehee Lee
Department of Marine Life Sciences, School of Marine Biomedical Sciences, Jeju National University

PP-179

Molecular characterization and expression of fish OKL38 family protein: OSGIN2 from rock bream *Oplegnathus fasciatus*

°William Shanthakumar Thulasitha, N. Umasuthan, M.S. Mothishri and Jehee Lee
Department of Marine Life Sciences, School of Marine Biomedical Sciences, Jeju National University

PP-180

MOLECULAR CHARACTERIZATION AND TRANSCRIPTIONAL ANALYSIS UPON VIRAL AND BACTERIAL PATHOGENS OF NOVEL PROFILIN ORTHOLOG FROM DISC ABALONE (*Haliotis discus discus*)

°Yucheol Kim[1], Hyung-bok Jeong[2], Seong-il Kang[2], Changnam Jin[2], H.M.L.P.B. Herath[1], Jehee Lee[1] and Bong-soo Lim[2]

[1]Department of Marine Life Sciences, School of Marine Biomedical Sciences, Jeju National University

[2] Fish Vaccine Research Center, Jeju Self-Governing province

PP-181

Pharmacokinetics and Residues of Amoxicillin after Intramuscular Injection to Cultured Olive Flounder, *Paralichthys olivaceus*

°Ji-Soo Kim, Ji-Hoon Lee, Soo-Jin Lee and Kwan-Ha Park

Department of Aquatic Life Medicine, College of Ocean Science and Technology, Kunsan National University

PP-182

Pharmacokinetics and Residues of Ampicillin after Intramuscular Injection to Cultured Olive Flounder, *Paralichthys olivaceus*

°Ji-Hoon Lee, Ji-Soo Kim, Soo-Jin Lee and Kwan-Ha Park

Department of Aquatic Life Medicine, College of Ocean Science and Technology, Kunsan National University

PP-183

Studies on efficacy of ampicillin against *Streptococcus spp.* isolated from olive flounder, *Paralichthys olivaceus*

°Soo-JinLee, Ji-SooKim, Ji-Hoon Lee and Kwan-Ha Park

Department of Aquatic Life Medicine, Kunsan National University

PP-184

Studies on efficacy of amoxicillin against *Streptococcus spp.* isolated from olive flounder, *Paralichthys olivaceus*

°Soo-JinLee, Ji-SooKim, Ji-HoonLee and Kwan-Ha Park

Department of Aquatic Life Medicine, Kunsan National University

PP-185

Hierarchical Dendrogram of Genetic Distances Obtained from Mollusk Species

°Dae-Hyun Kim, Sang-Hoon Choi and Jong-Man Yoon
Department of Aquatic Life Medicine, College of Ocean Science and Technology, Kunsan National University,

PP-186

Characteristics of koi herpesvirus (KHV) in healthy seeds of cyprinids

°Mi-Young Cho, Seong Don Hwang, Kwang Il Kim, Boyoung Jee and Myoung-Ae Park
Aquatic life Disease Control Division, National Fisheries Research and Development Institute, Busan, Korea

PP-187

Evaluation of bio preservation and gamma irradiation
for preservation of sea food *Penaeus monodon*

°Paari Alagesan[1,2] and Venkatesan Arul[3]
[1]East coast life science institute, Gangneung-Wonju National University,Korea
[2]Department of Marine Bioscience, Gangneung-Wonju National University , Korea
[3]Department of Biotechnology, School of Life science, Pondicherry University, Pondicherry, India

PP-188

Detection of *Azumiobodo hoyamushi,* the causative agent of soft tunic syndrome of the sea squirt *Halocynthia roretzi* using real-time qPCR

°Kyung-Il Park[a], Ki-Woong Nam[a], Yun-Kyung Shin[b]
[a]Department of Aquatic Life Medicine, College of Ocean Science and Technology, Kunsan National University,
[b]National Fisheries Research Institute

PP-189

Characterization and resuscitation of viable but non-culturable *Edwardsiella tarda*

°Nam-I Gang, Jin-Young Park, Se-Yun Jin and Eunheui Kim
Department of Aqualife medicine, Chonnam National University

PP-190

Molecular cloning and functional characterization of serum amyloid P component (SAP) in rock bream, *Oplegnathus fasciatus*

°Seong Don Hwang[1], Mi Young Cho[1], Kwang Il Kim[1], Yeoung Hwan Jang[1], Dong Hee Jo[2], Kwang-Min Choi[2], Ju-Won Kim[2], Ji-Min Jeong[2], Bo-Young Jee[1], Chan-Il Park[1] and Myoung-Ae Park[1]
[1]Aquatic life disease control division, National Fisheries Research & Development Institute
[2]Department of Marine Biology and Aquaculture, Gyeongsang National University

PP-191

Genetic relevance between aquatic animal viruses derived from fish, shellfish and seawater

°Kwang Il Kim[1], Mi Young Cho[1], Seong Don Hwang[1], Yeoung Hwan Jang[1], Bo-Young Jee[1], Hyun Do Jeong[2]and Myoung-Ae Park[1]
[1]Aquatic life Disease Control Division, National Fisheries Research and Development Institute
[2]Department of Aquatic Life Medicine, Pukyong National University

PP-192

Isolation and culture condition optimization and antibacterial effect of *Bacillus amyloliquefaciens* JFP-2

°Dong-Hwi Kim, Kyung-Mi Moon, Ji-Woon Jeong, Moon-Soo Heo
Department of Aquatic Biomedical Sciences and Marine and Environment Research Institute, Jeju National University

PP-193

The antibacterial activity against Fish pathogen of MK-11 isolated from Jeju coastal

°Min-Sun Kim, Subramanian Daraneedharan, Moon-Soo Heo
Department of Aquatic Biomedical Sciences and Marine and Environment Research Institute, Jeju National University

PP-194

Development of Loop-mediated isothermal amplification (LAMP) for Detection of *Streptococcus parauberis*

°Kyung-Mi Moon,So-Hyun Park, Moon-Soo Heo
Department of Aquatic Biomedical Sciences and Marine and Environment Research Institute, Jeju National University

PP-195

Phylogenetic diversity of Bacterial community inhabited in Marine sponge *Callyspongia elegans*

°So-Hyun Park, Dong-Hwi Kim, Moon-Soo Heo
Department of Aquatic Biomedical Sciences and Marine and Environment Research Institute, Jeju National University

PP-196

Antibacterial effect of three rhizobacterial strains against fish bacterial pathogens

°Ji-Woon Jeong, Min-Sun Kim, Moon-Soo Heo
Department of Aquatic Biomedical Sciences and Marine and Environment Research Institute, Jeju National University

PP-197

Effect of water temperature to produce protective immune against viral haemorrhagic septicemia(VHS) vaccine in olive flounder (*Paralichthys olivaceus*)

°Je-Won Ryu, Sung-Ju Jung
Department of Aqualife Medicine, Chonnam National University
Aquatic Animal Hospital, Chonnam National University

PP-198

Efficacy of *Solanum nigrum L* extract for Viral hemorrhagic septicemia virus (VHSV) replication in fathead minnow cell line and *Paralichthysolivaceus*

°Han-Kook Yang[1,2], Satheesha Avunje[3],Young Bae Ryu[4], Sung-Ju Jung[1,2]
[1]Department of Aqualife Medicine, Chonnam National University
[2]Aquatic Animal Hospital, Chonnam National University
[3] Central Institute of Brackish water Aquaculture, Chennai, India
[4] Korea Research Institute of Bioscience and Biotechnology (KRIBB)

PP-199

Effect of virus infectivity titer following centrifugation and filtration during virus extraction from fish samples

°Wi-Sik Kim[1], Jong-Oh Kim[1], Mamoru Yoshimizu[2], and Myung-Joo Oh[1]
[1]Department of Aqualife medicine, Chonnam National University, Korea
[2]Faculty of Fisheries Sciences, Hokkaido University, Japan

PP-200

Correlation of water temperature shifting and virus replication pattern in *Megalocytivirus*-infected rock bream (*Oplegnathus fasciatus*)

°Myung-Hwa Jung[a,b], Chamilani Nikapitiya[a], Myung-Joo Oh[a], Sung-Ju Jung[a,b]

[a] Department of Aqualife Medicine, Chonnam National University

[b] Aquatic Animal Hospital, Chonnam National University

PP-201

Megalocytivirus, FLIV (flounder iridovirus) isolated from olive flounder, *Paralichthys olivaceus* does not cause high mortality

°Myung-Hwa Jung, Sung-Ju Jung

Department of Aqualife Medicine, Chonnam National University

Aquatic Animal Hospital, Chonnam National University

PP-202

Effect on energy metabolism related genes transcription in Megalocytivirus (family *Iridoviridae*) infected rock bream (*Oplegnathus fasciatus*) during infection.

°Chamilani Nikapitiya[1], Myung-Hwa Jung[1,2], Sung-Ju Jung[1,2] and Myung-Joo Oh[1]

[1] Department of Aqualife Medicine, Chonnam National University

[2] Aquatic Animal Hospital, Chonnam National University

PP-203

Transcriptional analysis of MHC class I presentation pathway genes in response to Megalocytivirus (family *Iridoviridae*) in rock bream (*Oplegnathus fasciatus*) at high mortality water temperature

°Chamilani Nikapitiya[1], Myung-Hwa Jung[1,2], Jehee Lee[3], Myung-Joo Oh[1] and Sung-Ju Jung[1,2]

[1] Department of Aqualife Medicine, Chonnam National University
[2] Aquatic Animal Hospital, Chonnam National University
[3]Department of Marine Life Sciences, Jeju National University

PP-204

Occurrence of philometroides nematode infection of cultured rockfish *Sebastes schlegeli* in Cheonsu Bay of the west coast in Korea

°Han-Gill Seo[1], Jung-Soo Seo[1], Min-Kyung Ryu[1], Eun-Hye Lee[1], Se-Ryun Kwon[2], Jong-Soon Kang[3], Yun-San No[3], Hye-Sung Choi[1], Sung-Hee Jung[1] and Hyun-Ja Han[1]
[1]Pathology Division, National Fisheries Research & Development Institute
[2]Department of Aqualife Medicine, Sun Moon University
[3]Chungnam Fisheries Management Office

PP-205

Effects of cimetidine on vaccine efficacy of orally administered live auxotrophic *Edwardsiella tarda* mutant in olive flounder(*Paralichthys olivaceus*)

°Yue Jai Kang[1], Jun Soung Kwak[2], Ki Hong Kim[2]
[1]Department of Aquatic Life and Medical Sciences, Sun Moon University
[2]Department of Aquatic Life Medicine, Pukyong National University

PP-206

The first case of rescue, care and release of finless porpoises, *Neophocaena asiaeorientalis*, in Korean waters

°Kyum Joon Park[1*], Young Ran Lee[2], Yong Rock An[1], Hyun Woo Kim[1], Doo Nam Kim[1], Doohae An[1], and Yeonghey Kim[1]
[1]Cetacean Research Institute, National Fisheries Research & Development Institute
[2]Exhibiteducation Team of Lotteworld Aquarium, Hotellotte Lotteworld

PP-207

Parasitic infection Cases of finless porpoises (*Neophocaena asiaeorientalis*) in Korean waters

°Youg Ran Lee[1*], Kyum Joon Park[2], Yong Rock An[2,] Tae-Geon Park[3], Yeonghye Kim[2]
[1]ExhibiteducationTeam of Lotteworld Aquarium , HotelLotteLotteworld
[2]Cetacean Research Institute, National Fisheries Research & Development Institute
[3]Education Research Team, Korea Institute of Maritime and Fisheries Technology

PP-208

Tracking the released marine mammals

°Yong-Rock An, Kyum Joon Park, Hyun Woo Kim, Doo Nam Kim, Doohae An
Cetacean Research Institute, National Fisheries Research and Development Institute

PP-209

Characterization of polymorphism based on repetitive sequence in flounder iridovirus

°Young Chul Kim[1], Woo Ju Kwon[1], Iseul Kim[1], Ji Hee Byun[1], Min Ji Yoon[1], Hyun Do Jeong[1]

[1]Department of Aquatic Life Medicine, Pukyong National University

PP-210

Changes in the blood parameters of the finless porpoises (*Neophocaena asiaeorientalis*) kept the aquarium

°Myoung Sug Kim[1*], Doo Nam Kim[2], Hye-Sung Choi[1], Doohae An[2], Myoung Ae Park[3], and Sung Hee Jung[1]

[1]Pathology Division, National Fisheries Research & Development Institute

[2]Cetacean Research Institute, National Fisheries Research & Development Institute

[3]Aquatic Life Disease Control Division, National Fisheries Research & Development Institute

PP-211

Effects of Alpha lipoic acid (ALA) on non-specific immune responses of nile tilapia, *Oreochromis niloticus*

°Yo-Sep Hwang, Chang-Ju Kim, Su-Hwan Park, Sang-Hoon Choi*

Department of Aquatic Life Medicine, KunsanNational University

PP-212

Transcriptional analysis of antioxidant and HSPs genes in the abalone, *Haliotis discus hannai* exposed to $NiCl_2$ during thermal stress

°EunYoung Min, Yong-Joo Cha, ShinHu Kim, JungSick Lee*, Inn-Sil Kwak**, JaeWon Kim*** and Ju-Chan Kang

Department of Aquatic life medicine, Pukyong National University

*Department of Aquatic life Medicine, Chonnam National University

**Faculty of Marine Technology, Chonnam National University

***Department of Marine Life-Science, Gangwon Provincial College

PP-213

Toxicity evaluation of gallate derivatives on olive flounder *Paralichthys olivaceus* and aquatic ecosystems

°So Young Kang[1], Wi-Sik Kim[1], Jae-woong Lim[1], Myung-Joo Oh[1], and Woo-Keun Kim[2]
[1]Department of Aqualife Medicine, Chonnam National University
[2]Korea Institute of Toxicology

PP-214

In Vitro Anti-bacterial and Anti-scuticociliate Activities of Marine Red alga *Polysiphonia morrowii* Extract and its Bromophenols with Structure-Activity Relationships

°So Young Kang, Sang-yun Lee, Jun-ho Choi, and Sung-Ju Jung
Department of Aqualife Medicine, Chonnam National University

▣ Fisheries Technology (PP-215 ~ PP-231)

PP-215

Effect of shape and solidity ratio of traps on their hydrodynamic resistance

Kyoung bum KANG[1], Myung Sung Koo[2] and Suk Jong KIM[2*]
[1]Faculty of Fisheries, Kagoshima University, [2]College of Ocean Science, Jeju National University

PP-216

The main factor and counterplan of marine casualties of fishing vessel according to the type of fishing job in Korea

Byung-Soo PARK, Il-Kwon Kang[1*], Sang-Jun HAM[2], Chi-Wan PARK[2]
Dep. of Maritime Police & Production system, Gyeongsang National University,
[1]Division of Marine Production System management, Pukong National University,
[2]Dep. of Fisheries Physics, Graduate School, Pukyong National University

PP-217

Efficiency of wave absorption on the motion of characteristic for Tawoo Jeju

Chan-Moon Choi, Jang-Young Ahn, Chang-Hun Lee, Byeong-Yeob Kim, Hyun-Hak Park
Department of Marine Industry and maritime police, jeju National University

PP-218

Changes of nutritional composition due to the mixture of natural light on single light emitting diode (LED) light sources

Jae-Hyun Bae[1], Heui-Chun An[1], O-Nam Kwon[2], Jin-Chul Park[3] and Heum-Gi Park[3*]
[1]Aquaculture Industry Division, East Sea Fisheries Research Institute, National Fisheries Research & Development Institute
[2]Marine Biology Center for Research and Education, Gangneung-Wonju National University
[3]Department of Marine Bioscience, Gangneung-Wonju National University,

PP-219

The effect of the different LED light sources attached at the IMTA facility to the species composition and biomass of microalgae

Heui-Chun An[1], Jae-Hyun Bae[1], O-Nam Kwon[2], Jin-Chul Park[3] and Heum-Gi Park[3*]
[1]Aquaculture Industry Division, East Sea Fisheries Research Institute, National Fisheries Research &

Development Institute
[2]Marine Biology Center for Research and Education, Gangneung-Wonju National University
[3]Department of Marine Bioscience, Gangneung-Wonju National University

PP-220

Development of Live Fish Container for Long Distance Transportation

Yong-Su Yang[1*], Bo-Nam Kwon[1], Kyounghoon Lee[1], Seonghun Kim[1], Jaehyun Bae[2]
[1]Fisheries System Engineering Division, NFRDI
[2]Aquaculture Industry Division, East Sea Fisheries Research Institute, NFRDI

PP-221

Acoustic characteristics of Jellyfish Using a multi-frequency difference method

Kyounghoon LEE[1*], Won-Duk YOON[2], Chang-Hoon HAN[2], Seonghun Kim[1], Seong-Wook PARK[1]
[1]Fisheries System Engineering Division, National Fisheries Research & Development Institute
[2]Fishery and Ocean Information Division, National Fisheries Research & Development Institute

PP-222

The fishing characteristic of Korean tuna purse seine fishery in the Western and Central Pacific Ocean

Mi Kyung Lee[1], Sung Il Lee[1*], Zang Geun Kim[1], Jeong Eun Ku[1], Sang Chul Yoon[1],
and Dong-Woo Lee[1]
[1]National Fisheries Research and Development Institute (NFRDI)

PP-223

CPUE standardization for bigeye tuna caught by Korean tuna longline fisheries in the Indian Ocean (1977-2012)

Sung Il Lee[1*], Zang Geun Kim[1], Mi Kyung Lee[1], Dong-Woo Lee[1], Hee Won Park[1], and Tom Nishida[2]
[1]National Fisheries Research and Development Institute (NFRDI), Busan, Korea
[2]National Research Institute of Far Seas Fisheries (NRIFSF), Shizuoka, Japan

PP-224

Comparison of productivity between the local fishing vessels operating in the north and south water of Jeju Island

Chang-Heon Lee, Jang-Young Ahn, Chan-Moon Choi, Byeong-Yeob Kim
Department of Marine Industry and maritime police, jeju National University

PP-225

Physicochemical characteristics of baits for swimming carb *Portunus trituberculatus* pots

Ho Young CHANG[1*] and Jae Geun KOO[2]
[1]Department of Marine Science and Production, Kunsan National University,
[2]Department of Food Science and Biotechnology, Kunsan National University

PP-226

The tendency of marine accidents occurring in the sea around jeju island and provincial policy directions to prevent the marine accidents

Ju-Hee CHO, Jang-Young AHN, Chan-Moon CHOI, Chang-Heon LEE, Byung-Yeob KIM
Jeju National University
Department of Marine Industry and Maritime Police, Jeju National University

PP-227

The Stability of side trawler operating in East sea in Korea

Hyo-Jae Jo, Il-Kwon Kang[1*], Sang-Jun HAM[2], Chi-Wan PARK[2]
Division of Ocean System Engineering, Korea Maritime University,
[1]Division of Marine Production System management, Pukong National University,
[2]Dep. of Fisheries Physics, Graduate School, Pukyong National University

PP-228

Behavior analysis of rockfish *(Sebastes inermis*) corresponding to the wavelength of LED light

Gyeom Heo[1], Hyeon-Ok Shin[2], Min-A Heo[1]
[1]Department of Fisheries Physics, [2]Division of Marine Production System Management, Pukyong National University

PP-229

Electroretinographic Analysis of Dark-adapted Goldfish in White LED Light

Min-Ah Heo[1*], Hyeon-Ok Shin[2], Eun-ji Lee[2], and Mi-Jin Lee[2]
[1]Department of Fisheries Physics, Pukyong National University
[2]Department of Marine Production System Management, Pukyong National University

PP-230

Hydro-acoustic and visual census survey of demersal fish aggregations in Ulju small scale marine ranching area (MRA), Korea

Bo-kyu Hwang[1*], JiHoon Lee[2], Jeong-kyu Oh[3]
[1]Department of Marine Science & Production, Kunsan National University
[2]Division of Marine Technology, Chonnam National University
[3]Korea ecology institute Inc.

PP-231

Capture efficiency of dredge in the coastal waters of Gangneung

Heui-Chun An, Jae-Hyun Bae, Jong-Myung Park, Byoung-Sun Yoon, Sung-Eic Hong[1],
East Sea Fisheries Research Institute, National Fisheries Research &Development Institute
[1]Bada Ecology Research

▣ Malacological (PP-232 ~PP-241)

PP-232

Comparison Study on Characteristics of Oyster Shells Cultured in Various Waters in Korea.

Sang-Man Cho[1], Sueng Woo Lee[2]

[1]Department of Aquaculture and Aquatic Sciences, Kunsan National University

[2]CO_2 Sequestration Research Department, Korea Institute of Geoscience and Mineral Resources

PP-233

Comparative studies on the number of *Perkinsus olseni* cells released from dead and live Manila clams (*Ruditapes philippinarum*)

Ki-Woong Nam, Kyung-Il Park

Department of Aquatic Life Medicine, Kunsan National University

PP-234

A comparison of Habitat characteristics of Surface sediments between on the Cultured Manila clam, *Ruditapes philippinarum* and Mud shrimp, *Upogebia major* at the Tidal flat in the West coast of Korea

Yoon seok Choi, Jae hee Song, Kwang jae Park, Sang ok Chung, Sang pil Yoon and Kyoung ho An

National Fisheries Research & Development Institute Tidal Flat Research Institute

PP-235

Transcriptional responses in gills of Manila clam (*Ruditapes philipphinarum*) exposed to copper (Cu) and cadmium (Cd) using oligo microarray

°Dananjaya S.H.S[1], Jin-young Choi[1], G.L. Godahewa[2], Jehee Lee[2] and Mahanama De Zoysa[1]

[1]College of Veterinary Medicine, Chungnam National University

[2]Department of Marine Life Sciences, Jeju National University

PP-236

Distribution characteristics of the malacofauna in habiting in subtidal rocky bottom in Jeju Island

Jong-Uk Lee[1*], Min-Ho Son[1], Dae-Ik Kim[1] and Ki-Joon Kim[2]
[1]Marine Eco-Technology Institutute Co., Ltd.
[2]Jeju Ocean, Korea

PP-237

Population structure analyses of *Crassostrea ariakensis* in East Asia using five concatenated mitochondrial DNA sequences

Eun-Ha Shin[1], Ju Lan Kim[1], Hee Jeong Kong[1], Hyung Soo Kim[1], Sudath T. Dammannagoda[2], Hyungtaek Jung[2], Cheul Min An[1], and Woo-Jin Kim[1*]
[1]Biotechnology Research Division, National Fisheries Research and Development Institute, Korea
[2]School of Earth, Environmental and Biological Sciences, Queensland University of Technology, Australia

PP-238

Genetic Distances and Identification of Three White Clam (*Meretrix* spp.) Populations Analyzed by PCR

Dae-Hyun Kim*, Kyung-il Park and Jong-Man Yoon
Department of Aquatic Life Medicine, College of Ocean Science and Technology, Kunsan National University

PP-239

A Study on the Optimum Stocking Density of Abalone, *Hailotis discus hannai* reared in Net Cage Culture

Byeong-Hak Kim, Min-Woo Park, Maeng-Hyun Son, Tae-Ik Kim
Southwest Sea Fisheries Research Institute, NFRDI

PP-240

The Effect of Growth and Survival Rate on Feeding Rate of Abalone, *Hailotis discus hannai* reared in Net Cage Culture or Indoor Tank Culture

Byeong-Hak Kim, Min-Woo Park, Maeng-Hyun Son, Tae-Ik Kim
Southwest Sea Fisheries Research Institute, NFRDI

PP-241

The Effect of Growth and Survival Rate of Juvenile Abalone, *Hailotis discus hannai* according as Immediate Reared in Net Cage Culture or Indoor Tank Culture

Byeong-Hak Kim, Min-Woo Park, Maeng-Hyun Son, Tae-Ik Kim

Southwest Sea Fisheries Research Institute, NFRDI

Abstracts

PS-1~9, OP-1~50, PP-1~240

Plenary & Invited Speaker Sessions

Plenary Session 1–9

PS-1

Drivers of fishery dynamics: Examples from the U.S. West Coast.

Speaker: David B. Sampson, PhD
Professor of Fisheries
Coastal Oregon Marine Experiment Station
and Department of Fisheries and Wildlife
Hatfield Marine Science Center
Oregon State University

Fisheries involve complex interactions between humans and fish stocks. Numerous factors and external drivers can profoundly influence fisheries and alter their development and long-term sustainability. These drivers include (a) the basic fish biology and population dynamics that provide the growth potential that is the foundation for sustainable fishing, (b) the oceanographic and habitat features that both support and restrict the biological productivity of the fish stocks, (c) the fish harvesting technologies that control how rapidly and efficiently fishers can conduct harvesting, (d) the fish processing technology that transforms raw fish products to more valuable forms, (e) the local and global markets that set prices for fish and fish products, (f) national policy and legislation that determines the goals for fisheries management, and (g) the fishery regulations used to implement fisheries policies. The presentation will illustrate these ideas using examples from several fisheries that occur off the west coast of the United States, including the US and Canada fishery for Pacific hake (*Merluccius productus*), the implementation of Rockfish Conservation Areas, which are closed to all forms of bottom fishing to reduce the bycatch of several overfished *Sebastes* species, and the resurgence in recent years of a northern fishery for Pacific sardine (*Sardinops sagax caerulea*).

PS-2

Struggles with species limits-fishes

Tetsuji Nakabo
The Kyoto University Museum, Kyoto University, Japan

Together with my graduate students, I have been studying East Asian fishes, including several species characterized by taxonomic problems, these past several years. The first four studies reported here were of edible commercial fishes. Taxonomic problems of such species, particularly if two or more species are actually involved, may have far-reaching effects, especially in the areas of abundance estimations and stock management. The fifth study concerns conservation biology, being the story of a species rescued from extinction.

Study 1: *Sebastes inermis,* cryptic species (Sebastidae)

For a long time, *Sebastes inermis* had been recognized as a single species including three color morphotypes. However, these morphotypes were found to differ both morphologically and genetically from each other in 2002. Subsequently their ecological separation was also confirmed and they are now recognized as separate species. Our taxonomic review of these species was concluded in 2007. (Kai and Nakabo, 2002, 2007).

Study 2: *Sebastes owstoni*, sexual dimorphism

Red and yellow morphotypes of *S. owstoni* were found about 20 years ago at Nishi-Maizuru fish market. Specimens representing the two morphs were initially analyzed by molecular methods, but no differences were found between them. Subsequent examination for sexual differences disclosed a growth-associated relationship between body color and sex, juveniles of both sexes being red with males becoming yellow with growth. On the other hand, adult females remained almost entirely red, in addition to growing larger than their male counterparts. Conversely, adult females were characterized by a relatively smaller eye than males. This report of sexual dimorphism in *S. owstoni* was the first for the genus *Sebastes*. (Yagishita et al., 2007)

Study 3: *Sphyraena iburiensis*, a new species (Sphyraenidae)

The fish fauna around Iburi, near Tosa-shimizu City, Kochi Prefecture, Japan, was studied by us from 1997 through 2000, in association with the construction of a small new aquarium close to Iburi fishing port by Osaka Aquarium Kaiyukan. Included among the examples of *Sphyraena* collected at Iburi fishing port during this project were some that differed somewhat from *Sphyraena flavicauda*, the usual species in the area. Before describing these specimens as new, we reviewed all of the relevant nominal species of *Sphyraena* described since Linnaeus's Systema Naturae 10th edition (1758). This required visits to museums in Europe and Australia in order to examine the types of some 11 nominal species, of which two were judged as valid and the remainder as synonymies of the former. As the newly-found specimens from Iburi had not conformed with any of the nominal species, they were

described as a new species, *Sphyraena iburiensis.* The new species is edible and sold in a supermarket in Tosa-shimizu, Kochi Prefecture. (Nakabo et al. eds., 2001; Doiuchi and Nakabo, 2005 & 2007; Doiuchi et al., 2011)

Study 4: Hybrids between *Sebastes vulpes* and *S. zonatus*

Discrimination between *Sebastes vulpes* and *S. zonatus* has often been difficult. Accordingly, planned aquaculture of *S. vulpes* gave rise to discussion regarding the identification of adults for artificial insemination. Historically, *Sebastes vulpes* had been recognized as having two major intraspecific variations, one such variation subsequently being described as a new species, *S. zonatus*. However, the validity/identity of each species remained problematic due to the occurrence of some individuals intermediate between the two. Accordingly, we undertook a molecular analysis, which demonstrated that the intermediate individuals found were hybrids between *S. vulpes* and *S. zonatus*. At present, despite the occurrence of such hybrids, the full specific status of both *S. vulpes* and *S. zonatus* is generally accepted. (Muto et al. 2011; Muto et al. 2013)

Study 5: "Kunimasu" – a resurrected species believed extinct for over 70 years! (Salmonidae)

Oncorhynchus kawamurae "Kunimasu", a species endemic to Lake Tazawa, Akita Prefecture, Japan, was believed to have become extinct just before World War II, due to acidic waters from the Tama River being introduced into the lake as part of a hydroelectric power scheme and provision of water for irrigation of rice fields. However, in 2010 "kunimasu" was found in Lake Saiko, Yamanashi Prefecture, one of the lakes to which eyed eggs of the species were introduced in 1935. In Lake Saiko, "Kunimasu" spawns around February in 30-40 m depth, deeper than other species of *Oncorhynchus* but similar to early records for the species in its original habitat, Lake Tazawa. Although having a similar appearance to "Himemasu" (*O. nerka*), with which "kunimasu" has undoubtedly been confused for a long time, a molecular analysis of the two species has found them to be reproductively isolated. (Nakabo, 2011; Nakabo et al., 2011 & 2014; Muto et al., 2013; Nakayama et al., 2013)

Reviewing the past opens the future!

References

Doiuchi, R. and T. Nakabo. 2005. The *Sphyraena obtusata* group (Perciformes: Sphyraenidae) with a description of a new species from southern Japan. Ichthyological Research, 52: 132-151.

Doiuch, R. and T. Nakabo. 2007. Molecular evidence for the taxonomic status of three species of the *Sphyraena obtusata* group (Perciformes: Sphyraenidae) from East Asia. Ichthyol. Res., 54: 313-316.

Doiuchi, R., S. Bogorodsky, and T. Nakabo. 2011. An underwater photograph of *Sphyraena iburiensis* (Perciformes: Sphyraenidae) from the Red Sea: first record outside Japanese waters. Ichthyol. Res., 58: 99-100.

Kai, Y. and T. Nakabo. 2002. Morphological differences among three color morphotypes of *Sebastes inermis* (Scorpaenidae). Ichthyol. Res., 49: 260-266.

Kai, Y. and T. Nakabo. 2008. Taxonomic review of the *Sebastes inermis* species complex (Scorpaeniformes: Scorpaenidae). Ichthyol. Res., 55: 238-259.

Kai, Y., K. Nakayama and T. Nakabo. 2002. Genetic differences among three colour morphotypes of the black rockfish, *Sebastes inermis*, inferred from mtDNA and AFLP analyses. Molecular Ecology, 2002(11): 2591-2598.

Muto, N., Y. Kai, and T. Nakabo. 2011. Genetic and morphological differences between *Sebastes vulpes* and *S. zonatus* (Teleostei: Scorpaeniformes: Scorpaenidae). Fish. Bull., 109: 429-439.

Muto, N., Y. Kai, T. Noda, and T. Nakabo. 2013. Extensive hybridization and associated geographic trends between two rockfishes Sebastes vulpes and S. zonatus (Teleostei: Scorpaeniformes: Sebastidae). J. Evol. Biol., 26(2013): 1750-1762.

Muto, N., K. Nakayama and T. Nakabo. 2013. Distinct genetic isolation between "Kunimasu" (*Oncorhynchus kawamurae*) and "Himemasu" (*O. nerka*) in Lake Saiko, Yamanashi Prefecture, Japan, inferred from microsatellite analysis. Ichthyol. Res., 60: 188-194.

Nakabo, T. 2011. "Kunimasu" *Oncorhynchus kawamurae* (Pisces: Salmonidae), 70 years after extinction in Lake Tazawa, Akita Prefecture, Japan. TAXA, Proceedings of the Japanese Society of Systematic Zoology, 30: 31-54.

Nakabo, T., K. Nakayama, N. Muto, and M. Miyazawa. 2011. *Oncorhynchus kawamurae* "Kunimasu," a deepwater trout, discovered in Lake Saiko, 70 years after extinction in the original habitat, Lake Tazawa, Japan. Ichthyol. Res., 58: 180-183.

Nakabo, T., Y. Machida, K. Yamaoka and K. Nishida eds. 2001. Fishes of the Kuroshio Current, Japan. Osaka Aquarium KAIYUKAN, Osaka, 300pp.

Nakabo, T., A. Tohkairin, N. Muto, Y. Watanabe, Y. Miura, H. Miura, T. Aoyagi, N. Kaji, K. Nakayama, and Y. Kai. 2014. Growth-related morphology of "Kunimasu" (*Oncorhynchus kawamurae*: family Salmonidae) from Lake Saiko, Yamanashi Prefecture, Japan. Ichthyol. Res., 61(2): 115-130.

Nakayama, K., N. Muto, and T. Nakabo. 2013. Mitochondrial DNA sequence divergence between "Kunimasu" *Oncorhynchus kawamurae* and "Himemasu" *O. nerka* in Lake Saiko, Yamanashi Prefecture, Japan, and their identification using multiplex haplotype-specific PCR. Ichthyol. Res., 60: 277-281.

Yagishita, N., Y. Kai, A. Yamazaki, and T. Nakabo. 2007. Sexual dimorphism in *Sebastes owstoni* (Scorpaenidae) from the Sea of Japan. Ichthyol. Res., 54: 198-206.

PS-3 [poster session]

Molecular insights into geographic and morphological variation within the *Eumicrotremus asperrimus* species complex (Cottoidei: Cyclopteridae)

Yoshiaki KAI[1], Duane E. STEVEBSON[2], Yuji UEDA[3], Tomonori HAMATSU[4] and Tetsuji NAKABO[5]

[1]Maizuru Fisheries Research Station, Field Science Education and Research Center, Kyoto University, Japan; [2]National Marine Fisheries Service, NOAA Fisheries, Alaska Fisheries Science Center; [3]Japan Sea National Fisheries Research Institute, Fisheries Research Agency; [4] Hokkaido National Fisheries Research Institute, Fisheries Research Agency; [5]The Kyoto University Museum, Kyoto University

Species of the family Cyclopteridae, or lumpsuckers, are characterized by having a sucking disk composed of modified pelvic fin elements, short gill openings, no normal scales, and no head spines. Most lumpsuckers have tubercles on the head and body, and their number and arrangement have widely been considered as important taxonomic characters for the definition of genera and identification of species. However, recent studies show that the difference in number of spiny tubercles could be attributed to sexual dimorphism.

In the present study, a molecular phylogeny of one of the common lumpsuckers, *Eumicrotremus asperrimus*, and related species, is presented on the basis of sequence variations in the cytochrome *b* and cytochrome *c* oxidase subunit I genes (1,659 base pairs) of mitochondrial DNA using specimens collected from across the North Pacific, including the Sea of Japan, Sea of Okhotsk, Bering Sea, and Gulf of Alaska. Specimens identified as *Eumicrotremus phrynoides*, *Cyclopteropsis bergi*, *Cyclopteropsis lindbergi*, and *Lethotremus muticus* on the basis of the presence or absence of spiny tubercles and the height of dorsal fin did not exhibit respective monophyly, but were randomly clustered with *E. asperrimus*. The cluster consisting of specimens morphologically identified as *E. asperrimus* and above four species was geographically divided into two well-diverged clades, corresponding to the eastern North Pacific (the Bering Sea, Aleutian Islands, and Gulf of Alaska) and the western North Pacific (the Seas of Japan and Okhotsk). Slight morphological differences between eastern and western clades were also evident, indicating they represent two different species. The genetic divergence of the two clades suggests that the speciation event has occurred during early-Pleistocene to late-Pliocene. In the western North Pacific species, two haplotype groups, roughly corresponding to the Seas of Japan and Okhotsk, were also found. Because the clear morphological differences were also evident between them, the western North Pacific species may include two subspecies. In contrast, no clear population structure was found in the eastern North Pacific species.

Although the presence and morphology of tubercles has been used extensively for species discrimination in Cyclopteridae, our results suggest that this character complex is confounded by intraspecific variation. Examined populations showed some sexual dimorphism in the relative development of the tubercles, although the pattern was different between eastern and western North

Pacific species. Specimens from the western North Pacific with reduced or no spiny tubercles were all males, while specimens completely covered with strong tubercles included both males and females. In contrast, the specimens from the eastern North Pacific with reduced tubercles included both males and females, as did the specimens completely covered with strong tubercles.

PS-4 [poster session]

Temporal and spatial variation of fish larvae and juvenile assemblages in the north of Hangzhou Bay, China

Junsheng ZHONG[1],Xin YAN[1],Mingxing WANG[1]and Choong-Hoon JEONG[2]

[1]College of Fisheries and Life Science, Shanghai Ocean University, China

[2]Ocean Science & Technology Institute, Inha University, Korea

To clarify the characteristics of the community of fish larvae and juveniles in the north of Hangzhou Bay, species composition, spatial-temporal distribution and diversity index were analyzed, as well as relevant environmental factors. Monthly collections were hold horizontally on surface waters by a larvae net (1.3m mouth-diameter, 0.5mm mesh-aperture), which fastened by a flowmeter on the mouth, fixed in a fishing-boat (trawling speed=2 sea mile/hour) for 10 minutes among 10 sampling stations each during January to December 2013. Specimen was fixed in 5% formalin seawater solution, and water temperature and salinity was measured at the same time.

A total of 81 eggs belonging to 6 species from 4 families and a total of 143,782 individuals of more than 69 species from 23 families were collected. *Collichthys lucidus* is in the majority among eggs. The most dominant species of larvae and juveniles was *Tridentiger barbatus,* accounting for 62.88% of this total abundance, followed by *Collichthys lucidus* for 13.02%, *Coilia mystus* for 9.22%, *Acanthogobius flavimanus* for 2.56% and *Acanthogobius ommaturus* for 2.32%.

Fish larvae in preflexion stage accounted for 89.12% of total abundance and were most in June, followed by fish larvae in postflexion stage (4.21%), fish juveniles (2.61%), fish larvae in flexion stage (2.57%), fish larvae in yolk-sac stage (1.43%) and egg (0.06%). The community of fish larvae and juveniles presented distinct seasonal variation. The individual number of fish larvae and juveniles in summer and spring was significantly higher than that in autumn and winter. The species number was most in summer by 48, followed by autumn (23), spring (17) and winter (5). The density in June had a sharp increase (13.50ind./m^3) and species numbers in July (species number=18) were most of all months.

There was a similar trend between the α-diversity index $H'$and J', while the α-diversity index D changed sharply between months. The maximum of $H'$and J' was the highest in St.4, but one of D was in St.10. According to the β-diversity analysis, β_{ws} of St.10 located in peak position overall showing that there were significant difference between St.10 and the others.

The offshore waters in the north of Hangzhou Bay provided important habitat for fish larvae and juveniles, especially for marine and estuary fish. In order to ensure the sustainable utilization of the fishery resources, it was necessary to lay great emphasis on the protection of fish habitat and environmental management when the fish resources were overdeveloped.

PS-5 [poster session]

Stable isotopes ($\delta^{15}N$ and $\delta^{13}C$) analysis of anadromous and non-anadromous *Coilia nasus* in the Yangtze River, China

Wenqiao TANG[1], Lei WANG[1] and Choong-Hoon JEONG[2]

[1]College of Fisheries and Life Science, Shanghai Ocean University, China

[2]Ocean Science & Technology Institute, Inha University, Korea

Studies of stable isotope values are increasingly being applied to the study of seasonal migrations of aquatic organisms. Accordingly, stable isotopes ($\delta^{13}C$ and $\delta^{15}N$) of the Japanese grenadier anchovy (*Coilia nasus)* from the lower Yangtze River and the adjacent East China Sea were used to distinguish different ecotypic groups, ascertain trophic nutrition position, and reflect environmental influences on *C. nasus*. $\delta^{13}C$ signatures of *C. nasus* sampled from Zhoushan (ZS), Chongming (CM) and Jingjiang (JJ) waters were significantly higher than the $\delta^{13}C$ values for organisms in Poyang Lake (PYL) ($P<0.05$), whereas $\delta^{15}N$ signatures in ZS, CM and JJ groups were significantly lower than $\delta^{15}N$ values in PYL *C. nasus* ($P<0.05$). Based on $\delta^{13}C$ and $\delta^{15}N$ signatures, we distinguished between anadromous (ZS, CM and JJ groups) and nonanadromous groups (PYL group). The trophic level (TL) of anadromous *C. nasus* was from 2.90 to 3.04, whereas the TL of nonanadromous *C. nasus* was 4.38; *C. nasus* occupied the middle nutrition position in the marine food web, and the top nutrition position in the Poyang Lake food web. *C. nasus* in Poyang Lake were significantly more enriched in $\delta^{15}N$ but depleted in $\delta^{13}C$, suggesting that anthropogenic nutrient inputs and terrigenous organic carbon are important to the Poyang Lake food web. This is the first application of isotopes to population assignment studies of the Japanese grenadier anchovy in the Yangtze River and its affiliated waters.

PS-6

Disease management status and problems of marine mammals in Korea

°Doo hae An

Director of Cetacean Research Institute,

National Fisheries Research and Development Institute

More than 130 species of marine mammals are distributing in the coastal waters to deep oceans, from tropical waters to polar seas all over the world. Of course, about 40 species of them have lived in Korean waters. But Japanese sea lion has been totally extinct already and local populations of northern right, gray, blue and fin whales are almost depleted due to the overhunting by foreign countries from 19th to 20th century. As a result, only 7 species including common minke whales, long-beaked common dolphins, Pacific white-sided dolphins, Indo-Pacific bottlenose dolphins, finless porpoises, spotted seals and northern fur seals are frequently encountered marine mammals in Korean waters. Even these animals are also threatened by entanglement or entrapment by various kinds of fishing gears. Some are suffering from illegal catches because they are still valuable in the seafood markets. For example, common minke whales are called as 'lottery from the sea' which means tens of million Korean wons or tens of thousands US dollars. Nobody can guarantee that there will be common minke whales in Korean waters tens of years later unless they are properly managed and conserved.

The other types of threats to marine mammals are pollutions, habitat destructions and global climate changes which may cause various kinds of disease and death. For instance, more than 200 finless porpoises have died from suffocation under the ice-covered Saemangeum Dyke in winter season 2011. And lots of marine mammals incidentally caught or stranding in Korean waters had infectious bacteria, heavy metal contamination, parasites and severe injury which can be direct or indirect causes of the deaths. But these causes of deaths could be proved by very limited number of experts at the Department of Veterinary in some universities in Korea. Sick or exhausted marine mammals have been rescued by bycatch-stranding response teams such as Ulsan Whale Experience Hall, Busan Aquarium, Hanwha Aqua Planet and Seoul Grand Zoo. These rescued animals are cared by aquarists or animal keepers although they need also special examination and treatment when they are rescued and rehabilitated.

In order to keep marine mammals in Korean waters from depletion or extinction, it is necessary to encourage the Korean Society of Fish Pathology to support research on disease of marine mammals and supply experts because Aquatic Life Disease Control Act takes charge in disease of whales and dolphins under the Korean legislative system.

PS-7

Marine plant diseases and their management

°Han Gil Choi, [2]Young Sik Kim, [3]Soon Jeong Lee, [3]Bo Young Jee and [3]Myoung Ae Park
Faculty of Biological Science, Wonkwang University, Korea
[2]School of Marine Life Science, Kunsan National University, Korea
[3]National Fisheries Research and Development Institute, Korea

Marine plants including seaweed and seagrass are one of important primary producers giving various ecological services using food andnursery grounds of many marine organisms. Recently, seaweed and seagrass beds gradually decreased because of pollution, eutrophication, and climate changes. Marine plant disease is defined the growth and reproduction decrease caused by pathogens like virus, fungi, animal and other algae. Ten percentage of annual production in *Porphyra* is lost resulting from fungal disease caused by the oomycete pathogens in Korea and more than 40% of seagrass beds were destroyed by wasting disease caused by *Labryinthulazosterae*inFlorida Bay and Queensland.

Nevertheless, research and management system on marine plant disease are in the beginning stage because of the relatively low attention compared with aquatic animals. Only a few countries are interested in the diseases and management procedures. Studies on seaweed diseases are mainly focused on the economical species such as *Porphyra*, *Undaria*, *Saccharina*, *Kappaphycus* and *Eucheuma* in Asian countries. In this talk, we are going to introduce seaweed diseases reducing income of fisherman and destroyingseaweed and seagrass beds in Korea and other countries. Also, three filamentous endophytic green algae, *Ulvellaleptochaete*,*Blastophysarhizopus*, and*Bolbocoleonpiliferum*, growing in fronds of *Grateloupia*will be introduced first time in Korea.

PS-8

The Three Sacred Treasures in Fisheries Acoustics
- Quantitative echosounder, Scanning sonar, Acoustic camera -

Kohji Iida

Faculty of Fisheries Sciences, Hokkaido University
3-1-1 Minato-cho Hakodate, Hokkaido, 0418611, Japan
iidacs@fish.hokudai.ac.jp

The Three Sacred Treasures in Fisheries Acoustics, namely,quantitative echosounder, scanning sonar and underwater acoustic camera, their history of development and recent trends are reviewed.
A quantitative echosounder has been made rapid progress during these threedecades. A quantitative echosounder has a function of not only finding fish school but also measuring fish density. The history of quantitative echosounder starts at 1970s. A quantitative echosounder at the time such like EK400 was developedfor the first time having TVG amprefire and digital echo integrator. Coming to 1990s, a quantitative echosounder got two splendid technologies, namely, a split beam and digital processing technologies. Herewith the quantitative echosoundersuch as EK500 and EK60 came to enable to measure not only fish density but also fish sizes using *in situ* target strength estimation. Basically the quantitative echosounder already fulfilled the demands ofresearchers in fisheries resources.However there are no limits in human lust. They required further information, such as species of fish, yet size and species of zooplankton. Recently manufactures and scientists in the world are about to come out with broad band and high resolution split beam quantitative echosounder. To say nothing of fish density, fish length, fish species, even size spectra of zooplankton are expected.
Scanning sonars aslo have been made rapid progress. Now a multibeam sonar provides not only horizontal fish school distribution, but also their volume, abundance, shape, and movement using advanced quantitative echosounder technologies. Using plural cross sectional images, a three dimensional shape and a volume of fish school can be estimated. Moreover due to have an echo integrator, the sonar can provide the fish abundance prior to fishing, so it contributes especially to purse seine fishery.
Lastly, High resolution underwater acoustic camera has developed using high frequency acoustics and acoustical lenses. It enables to measure size, shape and movement of individual living marine animals.

In order to demonstrate these technologies, some application investigations were conducted.To estimate how the abundance and the distribution of walleye pollock change around south of Hokkaido, acoustic surveys using quantitative echosounder combined with oceanographic surveys have been conducted from 2003 to 2007 for five years. Data obtained includes acoustic backscattering strength measured by Ek60 with the frequencies of 38 kHz and 120 kHz, temperature and salinity measured by CTD.

Walleye pollock in echograms was identified by the specific morphology of echo sign, distribution depth and target strength. Also zooplankton as preys was discriminated by the frequency

characteristics of target strength of zooplankton at 38 kHz and 120 kHz based on high pass bent cylinder model. Biomasses of walleye pollock and zooplankton were compared by their SAs (NASC) in 38 kHz and 120 kHz respectively.

Results showed that the walleye pollock distributed near the bottom of shelf slope around 200m to 300m in depth from spring to summer, after that they moved deeper from autumn to winter. On the other hand, horizontal distribution of zooplankton overlapped the distribution area of walleye pollock. However there were no correlations between biomasses of these two animals. Total catches of walleye pollock in this area was estimated from 45,000 to 70,000 ton.

Meanwhile a scanning sonar which has multiple beams can scan its acoustic beams quickly to any direction thus provides the two or three dimensional distribution of fish resources. Moreover by quantifying the sonar echo signals, we can estimate the fish abundance of target fish school. Some example of fish resource survey using scanning sonar, FSV30R in purse seine fishing for pelagic fish at the Pacific coast in northern Japan will be presented.

A high resolution underwater acoustic camera enclosed in a pressure-resistant case was developed to observe underwater animals. It enables to measure size, shape, and movement of living marine animals. Acoustic camera is originally used for medical diagnosis using 3.5 MHz ultrasonic signals and the echo from an object is displayed as an acoustic tomogram. The acoustical B mode image and an optical image by an underwater camera were transferred through underwater cable. Special features of the underwater acoustic camera are, 1) To observe marine animals in dark or opaque water, 2) To observe the tissue and shape of internal organ, 3) To observe the shape and movement of marine animals in natural conditions.The underwater acoustic camera was set on a sea bottom to observe behavior of marine animals. Several species of marine animals including zooplankton were observed during the periods.Generally, marine animals appeared more in nighttime than in daytime. In the daytime fish were appeared in optical camera and in the night time many animals including zooplankton were observed in acoustic camera. Though the optical camera with an infrared light projector was restricted short range, a large number of marine organisms including zooplanktons were recorded by acoustic camera. Appearances of zooplankton were concentrated between sunset and sunrise. The other fishlike images were increased after sunset and before sunrise during the field experiment.Even though it was difficult to measure sizes of animals by optical images due to distortion, acoustical images could provide correct shape and size of the animals. Swimming speeds of animals were also measured. Internal structures including a vertebra and a swimbladder of swimming fish were recorded.

Keywords: acoustic survey, echo sounder, walleye pollock, zooplankton, anchovy.

PS-9

Neuroendocrine control of gametogenesis and spawning in bivalve molluscs; potential manipulation of reproductive system

Makoto Osada
Graduate School of Agricultural Science, Tohoku University, Sendai, Japan
mosada@bios.tohoku.ac.jp

Manipulation of reproductive system is essential to lead an artificial seed production of bivalve molluscs to success. The occurrence of some kind of neuropeptide had been suggested to stimulate the early development of gonads in bivalve and gastropodmolluscs.It has been reported that a Gonadotropin Releasing Hormone (GnRH)-like peptide appeared to participate in proliferation of the gonial cells in bivalve mollusc administrating exogenous GnRH. On the other hand, the potential ofGnRH-like peptide has been immunologically demonstratedin gastropods, cephalopods and bivalvesmolluscs. Recently the primary structures of preproGnRHs and GnRH-like peptides have beenidentifiedin cephalopod and gastropodmolluscs.In these mollusc species and in bivalves the existance of a hypothalamic-pituitary-gonadal axis has not been recognized morphologically, or as a signal transduction system.We have pharmacologically and immunologically demonstrated that a GnRH-like peptide in the central nervous system of scallop induced spermatogonial proliferation. We then succeeded to isolate preproGnRHcDNAs from the yesso scallop and Pacific oyster and found the positive function of the predicted GnRH peptides on spermatogonial mitosis, which is likely mediated through estrogen synthesis but not mediated through GTH and didn't stimulate LH release from the vertebrate pituitary organ.These results provide some insight into GnRH-controlled reproduction of bivalve molluscs and functional evolution of GnRH in animals.

Serotonin (5-HT), a neurotransmitter, is well known as a trigger for spawning of bivalves,based on oocyte maturation and sperm motility activation. A novel inhibitor for 5-HT-induced oocyte maturation, Oocyte Maturation Arresting Factor (OMAF), has been found in the central nervous system of scallop. The OMAF interferes5-HT-induced oocyte maturation by a receptor-mediated mechanism via blood flow. An injection of anti-OMAF, which was generated by partial amino acid sequences of OMAF, into two kinds of scallop species before the 5-HT treatment resulted in a strongly amplified release of egg and sperm induced with 5-HT, suggestingthe release from suppressive activity ofOMAF due to the absorption with the antibody. The results indicate a new technique for induction of spawning in bivalves.

Oral Presentations

OP-1 ~ OP-50

OP-1

Changes in Chemical Indexes of Antarctic Krill Oil by Treatments of Different Chemicals

Soo-Bin Lee and Seon-Bong Kim

Department of Food Science and Technology, Pukyong National University

Antarctic krill *Euphausia superba* is the most abundant animal on the earth and important marine organism as food source. Krill is commonly used as feed of whales, seals, squids and fishes in marine ecosystem. Krill contains high contents of polyunsaturated fatty acid and fluoride. Krill oil also contains a high proportion of EPA, DHA, astaxanthin and fluoride. Fluoride cause many diseases like mottled teeth, osteosclerosis, calcification of ligaments and tendons, and allergies. The high content of fluoride in krill makes it unsuitable to consume in large quantities as human food material. Developments of the methods to remove the fluoride and to improve the quality of krill oil are necessary to increase the use of krill as a food source. This study was conducted to elucidate changes of chemical indexes in Antarctic krill oil by treatments of different chemicals. Krill oil was extracted with n-hexane from freeze-dried krill powder. Acid value, peroxide value, iodine value, astaxanthin and fluoride as chemical indexes of krill oil were investigated. The chemicals adopted were acetic acid, phosphoric acid, citric acid, hydrochloric acid, sodium acetate, sodium citrate, sodium phosphate, sodium hydroxide and sodium carbonate. As a result, acid value of intact krill oil was dramatically decreased by the treatments of acetic acid, citric acid, phosphoric acid, hydrochloric acid, sodium phosphate and sodium hydroxide. Peroxide value of intact krill oil was significantly decreased by the treatments of phosphoric acid and citric acid. Iodine value of intact krill oil was decreased by the treatments of citric acid, phosphoric acid and sodium citrate. Fluoride content of intact krill oil was also remarkably decreased by the treatments of citric acid, sodium carbonate and sodium hydroxide. On the other hand, astaxanthin content of intact krill oil was relatively increased by the treatments of acetic acid, citric acid and hydrochloric acid. In brief, through treatments of chemicals, acid value, peroxide value, iodine value and fluoride content of the krill oil were decreased, but astaxanthin content was relatively increased. Especially, krill oil showed better chemical indexes by treatment with citric acid than treatment with other chemicals. The results are that applying the chemical treatment on krill oil can lead to the potential of producing the extra valued products.

OP-2

Deodorant Activity of Botanical Polyphenolic Compounds against Methyl Mercaptan

Yeon Kim[1], Young-Mog Kim[1], Hyeung-Rak Kim[2] and Seon-Bong Kim[1*]

[1]Department of Food Science and Technology, Pukyong National University

[2]Department of Food Science and Nutrition, Pukyong National University

The off-flavor is commonly caused by volatile sulfide compounds (VSCs) such as hydrogen sulfide, methyl mercaptan and dimethyl mercaptan, which are made from bacterial and enzymatic reactions. It has been known that methyl mercaptan among VSCs is especially generated through bacterial degradation of food remains, saliva and blood in the mouth as well as in foods. It is also significantly correlated between the concentration of methyl mercaptan and halitosis. It is considered that the deodorant of methyl mercaptan might have an effect on not only food but also halitosis. Interests concerning natural plant extracts are growing as effectual and highly safe substance in oral care. In the previous study, natural plant extracts of green tea, rosemary, thyme and marine algae were investigated for a natural anti-halitosis component. However, concrete deodorant substances and mechanism about marine algae are in short. So, this study was conducted to elucidate deodorant activity of botanical polyphenolic compounds against methyl mercaptan. Eckol, dieckol, catechol, catechin, phloroglucinol, chlorogenic acid, epigallocatechin gallate (EGCG), epicatehcin gallate (ECG), epigallocatehcin (EGC), caffeic acid and tannic acid were used as botanical polyphenolic compounds. The deodorant activity against methyl mercaptan was represented as IC_{50} (50% inhibitory concentration). Methyl mercaptan was determined by GC-FPD. Dieckol, one kind of phlorotannin, indicated the highest deodorant activity against methyl mercaptan than sodium copper chlorophyllin which known as a commercial deodorant. The high antimicrobial activity against *Streptococcus mutans* was observed in catechol by paper disc. Also polyphenolic compounds such as catechol, EGC, eckol and dieckol have a high antimicrobial activity in the the minimun inhibitory concentration (MIC). Inhibitory activity of glucosyltransferase (GTase) was measured depending on the concentration. Among them, eckol exhibited the highest inhibitory activity in 1 mg/mL concentration. In conclusion, this study confirmed that botanical polyphenolic compounds have the deodorant activity against methyl mercaptan as well as antimicrobial activity on *S. mutans*.

OP-3

Optimization of Sphericity for Production of Capsule Type Fish Roe Analogs

Eun-Hee Jo[1], Sueng-Mok Cho[2] and Seon-Bong Kim[1]

[1]Department of Food Science and Technology, Pukyong National University

[2]Korea Food Research Institute

Natural fish roes such as salmon roe, caviar, and flying fish roe and so on are decreasing in the production owing to marine pollution, overfishing, destruction of spawning grounds, and climate changes. The supply of natural fish roe cannot meet the demand, so the demand to fish roe analogs is increasing on the market. Fish roe analogs are regarded as a high value added processing technology that enables a stable supply of goods, hygienic quality control, and development of various favorite foods. This study was conducted to optimize sphericity for production of fish roe analogs with capsule type. Production of fish roe analogs was conducted by gelation of sodium alginate and calcium chloride solution using equipment with double nozzles. The equipment was put soybean oil through an inside nozzle and sodium alginate solution through an outside nozzle into calcium chloride solution. Sphericity for fish roe analogs was optimized by response surface methodology with central composite design. For the optimum conditions of sphericity, sodium alginate concentration, calcium chloride concentration, agitation speed of calcium chloride solution in a reactor, and dropping height were investigated as independent variables. The optimum conditions of sphericity for production of fish roe analogs were 1.66% (w/v) sodium alginate, 1.86% (w/v) calcium chloride, agitation speed of calcium chloride at 280 rpm, dropping height at 17 cm between the tip of nozzle and the surface of calcium chloride solution. The fish roe analogs showed high sphericity of 99.8±0.77% at the optimal conditions. The present study elucidated manufacturing conditions of fish roe analogs with a high sphericity near the natural ones using double nozzles. The results are considered to play a role for potential applications to substitutes of natural ones and development of other analog foods.

OP-4

Characterization of Bioactive Compounds in Brown Seaweed (*Sargassum horner*) Hydrolyzate using Subcritical Water

Yin Shipeng, and Byung-Soo Chun

Department of Food Science and Technology, Pukyong National University, 45 yongso-ro, Nam-gu, Busan 608-737, Korea, *E-mail: bschun@pknu.ac.kr

Seaweeds are potential renewable resource in the marine environment. It has unexplored bioactive compounds, which could be potentially as functional food for human health. Seaweed provides for an excellent source of bioactive compounds, such as carotenoid, dietary fiber, protein, vitamins, essential fatty acid, and minerals. Interestingly, seaweeds are a rich source of phytochemicals having anti-oxidant and antimicrobial properties. Among the functional effects of the seaweed, nutritional and health-related benefits have been widely studied. Most of seaweed has the anti-tumor, antifungal, anti-inflammatory, antioxidant and a wide range of biological activities. In this study, seaweed (*Sargassum honeri*) was extracted using an environmental friendly solvent, supercritical carbon dioxide (SC-CO_2). The SC-CO_2 will be carried out at constant temperature 45℃ and pressures ranging from 20MPa. It will be produced by the subcritical water hydrolysis (SWH) with the reaction temperatures for hydrolysis will be maintained from 180 to 260℃. The SWH will be done with condition 16-220 bar for the reaction pressure and 1:25 (*w/v*) for the ratio of material to water. High pressure pump will be applied to flow water from tank to reactor for getting initial pressure 1 bar. Analysis of physical properties will be measured by colorimeter and molecular weight determination. Also the bioactive compounds in hydrolysate will be determined by HPLC and characterized those activities with measuring antioxidant properties such as TFC, TPC, DPPH, ABTS, total sugar, reducing sugar, pH, viscosity.

OP-5

Setting of oyster shelf life and quality improvement

Woo Young Jung

Department of Food Science and Technology, Pukyong National University, Busan, Korea

Background (or Objective) of This Study : Since oyster is traded as raw fresh seafood in Korea, there is no food quality standard and specifications. Raw oyster is commonly packaged with oyster liquor, the quality should be fallen by both diagram degradation and increased turbidity. Commonly, oysters in plastic bag was traded in form packaged raw oyster and oyster liquor. Especially, in terms of an aqueous solution, it becomes murky due to the elution of protein and glycogen through an oyster's autodigestion, which make its preference lower. Accordingly, to initialize a shelf-life of packaged oyster, the physicochemical and microbiological experiments were conducted in this study with oyster stored at 5,10,20°C. In addition, Bacillus subtillis DB 9011 was used to investigate an improvement effectiveness of turbidity levels.

Methods : Studies were carried out to investigate changes in hygienic aspect and sensory preference. In hygienic aspect, physical methods are temperature, turbidity and pH. Chemical methods are dissolved oxyzen, salinity, glycogen, soluble protein. Microbiological method is total viable count. Furthermore, sensory characteristics were surveyed in color, state, smell of raw oysters, and turbidity, viscosity of oyster liquor. Sensory characteristic of raw oyster during everyday at 5, 10 and 20℃.

Results & Discussion : As a result, Total plate count has increased 6.2 X 10^4 during storage 10 day at 5℃. pH was decreased 5.8 during storage 8 day at 5℃, turbidity was changed 200 NTU during storage time 6day, Soluble protein was increased 800 mg/100 mL. Total result was investigated at the moment of sensory evaluation. Furthermore, Shelf-life was set at 6 day. In addition, Bacillus subtilis DB9011 has a effect on improving the turbidity.

OP-6

Calcium binding peptide from *Johnius belengerii* frame enhances bone regeneration and suppresses inflammation

Seong-Yeong Heo*, Won-Kyo Jung
Department of Biomedical Engineering, and Center for Marine-Integrated Biomedical Technology (BK21 Plus)
Pukyong National University, Busan 608-737, Republic of Korea

Annually, large amounts of fishery by-products such as bone, skin, fins, internal organs and head from seafood industrial processing are discarded or manufactured into fish feed. Such seafood by-products are needed to convert profitable and marketable products. Therefore, many researchers have been performed to utilize the abundance of protein, carbohydrate and mineral from seafood by-product.
In the present study, we report the bone regenerative and anti-inflammatory effects of calcium binding peptide isolated from *Johnius belengerii* frame on MG63 human osteoblast-like cells and RAW 264.7 macrophages. MG63 human osteoblast-like cells in medium with or without different concentration of calcium binding peptide for 2 and 4 days were incubated and measured alkaline phophatase (ALP) activity and mineralization. It was found that the presence of calcium binding peptide significantly increased ALP activity in a dose-dependent manner. Also, calcium binding peptide was enhances mineralization. Moreover, the exposure of lipopolysaccharide (LPS)-stimulated RAW 264.7 macrophages to calcium binding peptide result in decreased secretion of nitric oxide (NO) and down-regulated the level of cyclooxygenase-2 (COX-2) in a dose-dependent manner. Our results indicate that the calcium binding peptide isolated from *Johnius belengerii* frame enhances bone regeneration and that the peptide more effectively suppress inflammation.

OP-7

Improvement of chemical compositions and bioactivities of marine bioresources desalted by electro-dialysis

Gun-Woo Oh and Won-Kyo Jung*

Department of Biomedical Engineering, and Center for Marine-Integrated Biomedical Technology (BK21 Plus)

Pukyong National University, Busan 608-737, Republic of Korea

In order to effectively prepare useful components from marine-derived samples (phlorotannin and fucoidan from *Ecklonia cava*, fucoidan from *Undaria pinnatifida* sporophyll and *Sargassm fusiformis*, and extract from *Suaeda japonica*), electro-dialysis (ED) was adapted to desalt processing of the extracts. Desalt was carried out same condition with the examination of sodium chloride content, chemical composition and antioxidant and anti-inflammatory effects as compared to non-desalt samples. Desalted samples showed the lower conductivities and higher chemical compositions than non-desalt samples. Desalted samples increased the radical scavenging activity. Moreover, desalted samples enhanced cell viability, and hydrogen peroxide (H_2O_2) and nitric oxide (NO) scavenging activity in RAW 264.7 macrophages compared with non-desalt samples. These results suggest that chemical composition and biological effect of ED were more effective than non-ED and industrial application of ED process can be useful in marine bioresources.

OP-8

Cytogenetic study of diploid and induced tetraploid in Korean rose bitterling, *Rhodeus uyekii*

Hyun Woo Gil[1]*, Hee Jeong Kong[2], Chul Min Ahn[2], Bong Seok Kim[3] and In-Seok Park[1]

[1]Division of Marine Environment and Bioscience, College of Ocean Science and Technology, Korea Maritime and Ocean University, Busan 606-791, Korea

[2]Biotechnology Research Division, National Fisheries and Development Institute (NFRDI), Busan 619-705, Korea

[3]Reseach and Development Planning Department, NFRDI, Busan 619-705, Korea

In this study, we induced a tetraploid Korean rose bitterling, *Rhodeus uyekii*, by applying various hydrostatic pressure shock conditions. In all of the experimental groups, tetraploid was not induced at 4,500 psi pressure treatment. Instead, the induction rate of tetraploid was the highest at 7,500 psi hydrostatic pressure treatment. As a result, when processing the first time is the same, as the process time increases, the induction rate of each experimental group increased more and more; yet, there was no significant difference ($P > 0.05$). The production rate was 3.1%, which was the highest in all of the experimental groups that were treated at 6,000 psi for 10 min after being fertilized for 100 min. The production rate was the highest in the experimental groups treated only with hydrostatic pressure, whereas the production rate was the lowest in groups treated with hydrostatic pressure with chemical treatment. The abnormal rate of all experimental groups treated at 7,500 psi for 20 min was very high at about 5%. On the basis of these studies, only the hydrostatic pressure shock was considered as the most effective at inducing tetraploid through the calculated hatched rate, abnormal rate and induction rate. The most effective condition for inducing tetraploid was applying 6,000 psi of hydrostatic pressure shock for 10 min after being fertilized for 100 min. The chromosome number of the induced tetraploid Korean rose bitterling was 4n=96, while that of the diploid was 2n=48. In the diploid, there was one or two nucleolus in the cells, whereas the induced tetraploid showed one, two, three or four. The DNA contents of tetraploid and diploid were 3.68±0.009 pg/nucleus and 1.84±0.019 pg/nucleus according to the flow cytometric analysis. The DNA contents and chromosome number of the tetraploid were doubled those of the diploid.

OP-9

Comparison of cell and nuclear size difference between diploid and induced triploid in marine medaka, *Oryzias dancena*

In Bon Goo[1] · Hyun Woo Gil[2]* · Hyoung Kyun Han[1] · Sang Gu Lim[1] · In-Seok Park[2]

[1]Inland Aquaculture Research Center, National Fisheries Research and Development Institute, Jinhae 645-758, Korea

[2]Department of Marine Environment and Bioscience, College of Ocean Science and Technology, Korea Maritime and Ocean University, Busan 606-791, Korea

The influence of triploidization on cell and nucleus size characteristics of the same tissues of erythrocyte, retina, kidney, hepatocyte and midgut epithelium in marine medaka, *Oryzias dancena* has been determined histologically. Induced triploid fish are produced by cold shock treatments. Induced triploid erythrocyte size is significantly larger than diploid ($P < 0.05$). Likewise, the size of horizontal cell nucleus in inner nuclear layer of retina, ganglion cell nucleus in ganglion cell layer of retina, proximal tubule cell of kidney, hepatocytes and nuclear height of midgut epithelium all appear to be significantly larger than diploid ($P < 0.05$). On the other hand, retina thickness is larger in diploid than induced triploid ($P < 0.05$). Induced triploid shows low density of cell number. Results of this study suggest that same characteristics in the induced triploid exhibiting larger cells and nucleus sizes with fewer number of cells than the diploid can be useful criteria for the distinction between diploid and induced triploid, and also the ploidy level in marine medaka.

OP-10

Apparent digestibility coefficients of vegetable feed ingredients in diets for olive flounder (*Paralichthys olivaceus*)

Jin Choi[1], Md Mostafizur Rahman[1], Kyoung-Duck Kim[2], Kang-Woong Kim[2], Bong-Joo Lee[2], Hyon-Sob Han[2], and Sang-Min Lee[1]

Department of Marine Bioscience and Technology, Gangneung-Wonju National University[1]

Aquafeed Research Center, National Fisheries Research and Development Institute[2]

A feeding experiment was conducted to determine apparent digestibility coefficients of dry matter, crude protein, crude lipid, nitrogen free extract, gross energy and amino acids in wheat flour, ISP (Isolate soy protein), rice protein concentration, rapeseed meal, fermented soybean meal, pea protein, corn gluten meal, fermented soy protein concentrate, soybean meal, wheat gluten meal, beer yeast and kelp meal for olive flounder. Apparent digestibility coefficients (ADCs) were determined using a reference diet with chromic oxide indicator and test diets that contained 70% reference diet, by weight, and 30% of the test ingredient being evaluated. The flounder, averaging 150 g, was stocked in 400 L fiberglass tanks at a density of 20 fish per tank. Fecal samples were collected from three replicate groups of fish using fecal collection column attached to fish rearing tank. Apparent dry matter digestibility of flounder ranged 78.1%~93.7% for vegetable protein feedstuffs. Corn gluten meal and fermented soy protein concentrate showed the highest dry matter digestibility among all ingredients tested. Apparent crude protein and lipid digestibility of flounder ranged 32.2%~82.8% and 13.9%~76.1% respectively, for vegetable protein feedstuffs. Isolate soy protein, pea protein, fermented soy protein concentrate, soybean meal, wheat gluten meal and beer yeast showed the highest protein digestibility among ingredients tested ($P < 0.05$). For nitrogen free-extract, ADCs exceeding 60% were recorded for fermented soy protein concentrate and wheat gluten meal. Nitrogen free-extract digestibility coefficient of corn gluten meal was the lowest among the treatments ($P < 0.05$). The highest digestibility coefficient of energy was registered for fermented soy protein concentrate and the lowest digestibility coefficient of energy was recorded for beer yeast ($P < 0.05$). Amino acid availability reflected crude protein digestibility; however, for some ingredients, there were major differences in availability of different amino acids. The availability of amino acids in wheat gluten meal and beer yeast was generally higher than that in other ingredients tested. The availability of amino acids in kelp meal was the lowest among all ingredients tested. These data provide more precise information concerning nutrient and energy utilization of olive flounder and will allow ingredient substitutions in practical feed based on levels of available nutrients.

OP-11

Growth and Survival of Sea Cucumbers Ingested Fecal Solids from Recirculating Aquaculture System (RAS)

Feng Jin, U-Cheol Jeong, Ga-Hyun Kang, Jong-Kuk Choi, Byeong-Dae Choi[1] and Seok-Joong Kang*
Department of Marine Biology and Aquaculture, Gyeongsang National University, Tongyeong 650-160, Korea
[1]Department of Seafood Science and Technology, Gyeongshang National University, Tongyeong 650-160, Korea
*sjkang@gnu.ac.kr

Fecal solids, released from the recirculating aquaculture system, mainly consist of feces and uneaten feed. Since the fecal solids from the RAS has high contents of organic matter and salt, they are not allowed of treating at the general urban wastewater treatment plant nor sea disposal. In this study, fecal solids from the RAS for eels farming and rainbow trout farming were processed as the feed for the sea cucumber for the renewable feed resources for sea cucumber. For the control group the commercial feed were used. To evaluate the values of the feed, the ingestion, growth and survival of the sea cucumber were observed. The average weight of the sea cucumbers used in the experiment was 1.5 g and they were farmed at the temperature of 17±0.5°C and salt concentration of 32±0.5 psu for 90 days. After 90 days of the farming, it was shown that the every group has the survival rate of 100% and the growth rate of the group fed on the fecal solid-based feed was only 71% of the control group. Therefore, it would be reasonable to assume that the fecal solid from the RAS should require additional processes for raising its feed availability for using it as renewable feed resource.

OP-12 [Invited Lecture]

Underutilized Crops: Fish Feed Prospects

Sayed Azam-Ali[1], Max Herriman[1], Giva Kuppusamy[1], Kumar Katya[2], Hyeonho Yun[2] and Sungchul C. Bai[2]

[1]Crops for the Future Research Centre, University of Nottingham, Malaysia

[2] Dept. of Marine Bio-materials and Aquaculture/ Feeds and Foods Nutrition Research Center, Pukyong Nat'l University, Busan 608-737, Rep. of Korea

Future viability of the world aquaculture in truly sustainable manner has been acknowledged to depend on the part of the sustainability of aquafeed industry. Despite the three decades of fish meal (FM) & fish oil (FO) replacement research, these are still the principal ingredients in the majority of fish feeds. Furthermore, the concept of preventive health management in aquaculture has also been well accepted which has hastened the search for safe and natural dietary immunostimulants. On the other hand, ever increasing global population, limited space availability together with climate change threat, has exerted substantial pressure to expand the utilization of underutilized crops in direct/indirect human consumption. However, evaluation of the efficacy of these crops in fish feed formulation is still outside the purview of scientific community. Although, a wide variety of underutilized crops such as *Canarium odontophyllum* (Dabai), *Anona muricata* (Soursop), *Phyllanthus acidus* (Cermai), *Syzygium cumini* (Java plum), *Syzygium malaccense* (Malay apple) has been reported to have promising nutrient profile and antioxidants. The limited and scattered knowledge on nutrient profile and antinutrients has restricted its use in aquafeed formulation. Therefore, this presentation will review the perspectives in underutilized crops for the aquafeed sustainability.

OP-13

Taurine sparing effects of dietary sulfur amino acid supplementation juvenile rock bream (*Oplegnathus fasciatus*)

Fernando M. Ferreira*, Hyeonho Yun, Youngjin Park,
Gunhyun Park, Sera Choi, and Sungchul C. Bai
Dept. of Marine Bio-materials and Aquaculture/ Feeds and Foods Nutrition Research Center, Pukyong Nat'l University, Busan 608-737, Rep. of Korea.

A 8wk feeding trial was conducted to evaluate whether methionine and cysteine would effectively spare taurine supplementation on growth performance in juvenile rock bream, *Oplegnathus fasciatus*. Triplicate groups of 25 fish averaging 2.72 ± 0.04 g (mean ± SD) were fed one of the experimental diets. A fish meal based diet was used as Control, and four experimental diets were prepared by adding sulfur amino acid (SAA) at fixed level of 0.5% and taurine at graded levels of 0, 0.25, 0.5 and 1.0% (S+Tau0, S+Tau0.25, S+Tau0.5 and S+Tau1.0, respectively). After the feeding trial, growth performance of fish fed S+Tau0.25, S+Tau0.5 and S+Tau1.0 diets were significantly higher ($P<0.05$) than those of fish fed Control. Although ANOVA test suggested that in the presence of SAA in the diets, the optimum taurine supplementation level could be 0.25% in the diet and broken-line analysis of WG indicated a level of 0.3%, for positive effects on growth and feed utilization. Fish whole-body protein content and taurine concentration steadily increased with the increase of dietary level in the presence of SAA in the diets. On the other hand, whole-body lipid content significantly decreased with the incremental levels of dietary taurine. In conclusion, juvenile *O. fasciatus* seems to has a low ability to synthesize taurine from SAA, however when SAA were supplied the optimum dietary taurine requirement to improve growth ranged from 3.3 to 3.8 mg taurine.g diet^{-1}, which represents a reduction of approximately 50% compared to our previous experiment result.

Key words: Taurine, Sulfur amino acid, Methionine, Cysteine, Rock bream, *Oplegnathus fasciatus*

OP-14

Effects of shrimp farming on local livelihoods and environment at the coastal area of Bangladesh

Rahman Md Mizanur[1]*, HyeonhoYun[2], and Sungchul C. Bai[2]

[1]Member of Bangladesh Civil Service (Economic) Cadre, Planning Commission, Ministry of Planning, Sher-e-Bangla Nagar, Dhaka, Bangladesh. Email: mizanad@yahoo.com

[2]Dept. of Marine Bio-materials and Aquaculture/ Feeds and Foods Nutrition Research Center, Pukyong Nat'l University, Busan 608-737, Rep. of Korea.

Marine shrimp and freshwater prawn production are the fastest growing fisheries industries in Bangladesh. Shrimp aquaculture has significantly benefited in socioeconomic terms, and its high profitability and also generating the foreign exchange in Bangladesh. The present study was designed to assess the effects of shrimp farming on local livelihoods and environment at the coastal area. The research data were collected from 9 different categories of 160 stakeholders such as shrimp farmers, alternate rice & shrimp-prawn farmers, rice farmers, small trade owners, small trade workers, shrimp farm laborers, shrimp traders, land lessors and from shrimp seed collectors.

Shrimp farming positively impacted to the socioeconomic situation of stakeholders. Income of the coastal people, sanitation, working facilities of women, employment, health condition and the literacy rate were improved with the growing of shrimp farming. Shrimp farming also negatively impacted to the coastal livelihoods, in which rice production, freshwater fish culture, livestock production and land ownership of marginal farmers, social relations and sources of drinking water were decreased. And conflictions between poor and rich over the local ownership, between rice and shrimp farmers, and other problems such as income inequality, gender wage gap and social violence were increased due to shrimp farming in this coastal area. Environmental impacts such as mangrove degradation, loss of biodiversity, sedimentation, saltwater intrusion, drinking water pollution and contagious disease outbreaks are found to be the main obstacles for the development of sustainable shrimp farming. Moreover, all the stakeholders reported that their socio-economic condition and their livelihoods are improved since 1980 when starting shrimp farming started in the coastal area of Bangladesh.

OP-15

Status of Aquaculture in Uganda

Rebecca W. Nambi[1]*, Jackson L. Wadanya[1], Sungchul C. Bai[2],

[1]Directorate of Fisheries Resources, Ministry of Agriculture, Animal Industry and Fisheries, Uganda

[2]Department of Fisheries Biology, Pukyong National University, Busan, Korea

Uganda has a high potential for aquaculture production with more than 20% of the country's surface area covered by lakes, rivers and wetlands. Over 90% of aquaculture production comes from Nile tilapia (*Oreochromis niloticus*) and the African catfish (*Clarias gariepinus*). These species are native and have a high market demand. Aquaculture total production is about 90,000 tonnes making Uganda the third largest producer in Africa after Egypt and Nigeria. Aquaculture production systems include, ponds, cages, tanks, and reservoirs but ponds and cages are the major systems. Most feed production inputs are available locally and a suitable climate for fish farming all year round. However, seed, feed and land ownership are the main constraints that need interventions to enable aquaculture grow to commercial levels.

OP-16

Kaptai Lake: a rich source of protein supply in Bangladesh

M. Moniruzzaman[1,3]*, Hyeonho Yun[3], K. B. Uddin[1], A. K. M. S. Islam[1],
S. S. Basak[1], Rahman Md Mizanur[2,3], Yahia Mahmud[1] and Sungchul C. Bai[3]
[1] Bangladesh Fisheries Research Institute, Riverine Sub-station, Rangamati, Bangladesh.
[2] Bangladesh Civil Service (Economic) Cadre, Ministry of Planning, Bangladesh
[3] Dept. of Marine Bio-materials and Aquaculture/ Feeds and Foods Nutrition Research Center, Pukyong Nat'l University, Busan 608-737, Rep. of Korea.

Kaptai Lake is one of the most important inland freshwater fisheries in Bangladesh. It is the largest man-made reservoir in the Southeast Asia with an average area of 68,800 ha and fish production is 9,000 MT per year. The lake has a great potentiality in terms of capture and culture fisheries as well as livelihood improvement of peoples around the lake area. The government organizations like Department of Fisheries (DoF), Bangladesh Fisheries Research Institute (BFRI) and Bangladesh Fisheries Development Corporation (BFDC) are working together to increase the fish production of the lake. Every year during the spawning season of fishes (May-July), the lake is prohibited for fishing by the concern authority. The government has also been taken some initiatives on alternative aquaculture techniques to mitigate the protein requirement for the mass population of the region in this period. There many national and international non-government organizations (NGO's) are also involved with these initiatives. Some aquaculture practices include cage, pen and creek aquaculture which create the encouraging responses for the local livelihoods. Each year BFDC also release a huge number of fingerlings as the fish ranching process to get the maximum sustainable yield (MSY) from the lake. To protect the biodiversity of lake government has banning some detrimental fishing gears from indiscriminate fishing. Through these fisheries related activities such as selling license, operating fish market and fish processing plants etc government earns revenues annually from the lake.

OP-17 [General Lecture]

Variations of Sea surface elevation at Namchun Bay in Pusan with the passage of typhoons

Hong Chul-hoon and Sung-hyun Park
Division of Marine Production System Management, Pukyong National University, Busan 608-737 Korea

Sea level variations at Namchun Port in Pusan is investigated with the passages of typhoons using wave and weather data during May 1, 2012 to October 14, 2013. Averaged sea level in the data period is regarded as a zero-sea level with data intervals of 1 hour. In this data period here we investigated three typhoons which passed around the observation station (Namchun Port) and basically moved right northward to Korea peninsula. The sea levels started to respond to typhoons from the range of 800~1,000 km south of the observed station, and reached the maximum differently in time; Typhoon Bolaven (Dec. 2012) which passed through the Yellow Sea induced the maximum when the typhoon passed in the proximity of the station, and typhoons which passed through the Korean Strait and moved into the East/Japan Sea, such as Typhoons Sanba (Sept. 2012) and Danas (Oct. 2012), about one day after passing the station. The model suggested that this time lag is related to Kelvin wave propagation along the east coast of Korea.

OP-18

Age and growth using external rings and chondrophore growth bands of *Mactra chinensis* (Bivalvia, Mactridae) in Korea

Jung-Yeon Kim[1]*, Han-Ju Kim[1], Kyung-Tae Lee[1], Chul-Woong Oh[1]

[1]Department of Marine Biology, Pukyong National University, Busan 608-737, Korea

Age, growth and mortality of *Mactra chinensis* were investigated during the period from October 2012 to September 2013 in Myeong-Gi, South Korea. The relationship between shell length (SL) and height (SH) was related as the following equation, SL= 1.3249SH+0.0162 (r^2=0.9250, P<0.001). The relationship between shell length (SL) and total weight (TW) was expressed by the equation, $TW=0.0005SL^{2.6415}$ (r^2=0.8063, P<0.001). The monthly variation of the marginal index (MI) of the shell and chondrophore, showed that the ring of this species was formed once a year during July. we estimated the age of *M. chinensis* with reading the external rings on the shell and growth bands of chondrophore to compare growth parameters between the two growth characters. The age of this species ranged from 0 to 8 years (shell) and from 0 to 10 years (chondrophore). Based on external rings and growth bands of chondrophore for the same period, the von Bertalanffy growth curve is expressed by the equation, L_t = 101.53[1-exp{-0.16(t+0.75)}] and L_t = 90.03[1-exp{-0.20(t+0.50)}], respectively. The likelihood test showed that there was a significant difference in growth parameters between the two methods for L_∞ (P<0.001), K (P<0.001), t_o (P<0.001). Total mortality (Z) estimated from the shell and chondrophore was 1.386 yr^{-1} and 0.692 yr^{-1}, respectively. Survival rate estimated from the shell and chondrohore was 0.250 yr^{-1} and 0.501 yr^{-1}, respectively.

OP-19

Size- and Fecudnity-dependent Mortality Formulation for Sailpin Sandfish (*Arctoscopus japonicus*) in the southwestern East Sea

Seungmok Ha[1]*, Heona Kim[2], Hyung-kee Cha[3],
Jae Hyeong Yang[3], and Sung Il Lee[4] and Sukgeun Jung[1]

[1]Division of Fisheries Science, Jeju National University
[2]Division of Mathematical and Computational Biology, Kyungpook National University
[3]Dokdo Fisheries Research Center, NFRDI,
[4]Fisheries Resources and Environment Division, NFRDI

Reliable estimation of natural mortality of fish is critical in stock assessment for fishery management, but with a greater uncertainty. Sailfin sandfish (*Arctoscopus japonicus*) is a commercially important species in the eastern coast of Korea, and one of target species for the national stock recovery programs. Sandfish catches in Korea began to increase in the late 1960s, peaking at approximately 25,000 tons in 1971, but collapsed to < 1,400 tons in 1979. In recent years, sandfish catches have shown a low level at < 4,000 tons. Overfishing has been considered to be a main reason of the reduced catches, and a consensus was established between fishermen and policy makers to preserve the sandfish stock. To support the development of fisheries management and recovery plans, we estimated size- and age-specific natural mortality rates as a first step to the stock assessment of sandfish.

The parameters of size-dependent functions of maturity, fecundity and growth were derived by regression analysis. To estimate size-specific natural mortality rates of sandfish, we adopted the 'Bigger is Better' hypothesis, i.e., natural mortality rate is inversely proportional to the body length of fish. Because sandfish spawn only once each spawning season (total spawner), we applied the age-based Leslie matrix to obtain the constant of the inverse proportionality to derive size- and age-dependent mortality rates. Finally, we verified our result by comparing with other published mortality estimates of sandfish.

The derived maturity function of female sandfish was $P_k = \left(1 + e^{(7.3038-0.4584L_k)}\right)^{-1}$, the fecundity function was $E_k = 0.5484{L_k}^{2.5478}$, and the growth function was $L_k = 27.1712(1 - e^{-0.4688(k-0.1046)})$, where $P_k =$ The probability that an average female sandfish at age k matures to participate in spawning, $L_k =$ sandfish length at age k, $E_k =$ Fecundity of a female at age k, and $k =$ age of sandfish. The constant of the inverse proportionality of natural mortality was estimated to be $22.595\ yr^{-1}\ cm$. Age-specific instantaneous natural mortality rate was 4.617 yr^{-1} for $0\ yr$, 1.611 for $1\ yr$, 1.188 for $2\ yr$, 1.022 for $3\ yr$, 0.942 for $4\ yr$, 0.897 for $5\ yr$, and 0.871 for $6\ yr$. Our averaged estimate of instantaneous mortality over exploitable sandfish (1 to 6 yr), 1.089 yr^{-1}, was greater than 0.482 (Yang et. al., 2009) and 0.16 (Watanabe et. al., 2005) by a factor of 3. Biases in natural mortality during the early-life stages could significantly influence our estimates.

OP-20

Population structure and life history of *Neomysis awatschensis* (Crustacea: Mysidae) in Jeju Island, Korea

Jaeyong Bae[1], Sum Rho[2] and Wongyu Park[1]*

[1]Department of Maine Biology, Pukyong National University

[2]Center of Ornamentals, Reefs & Aquariums

Population structure and life history of a mysid *Neomysis awatschensis* were studied in Jeju Island, Korea. *N. awatschensis* was monthly collected from a semi-enclosed embayment of Jeju Island from May 2013 to May 2014. Temperature and salinity were measured during the sampling. Total length, carapace length and statolith diameter of samples were measured. Samples were classified by six demographic categories, and embryos in the marsupium were classified by developmental stage. Water temperatures ranged from 7 to 32°C during the study period. Body length of females was larger than males. The mean size of *N. awatschensis* had a significant negative correlation with seasonal temperature variations. The body lengths of *N. awatschensis* in winter and spring were larger than those in summer and autumn. Statolith diameter was significantly correlated with body lengths. Brooding females and juveniles appeared all year round. Juvenile's abundance increased in May, July, November and December. The number of embryos in marsupium increased with female size, but decreased with increasing development stage. In conclusion, the present study suggests that *N. awatschensis* produce more than 4 generations in a year and reproduces all year around. We also suggests that statolith diameter of mysids can be an indicator of body lengths in mysids.

OP-21

Vertical distribution of Cephalopod paralarvae around Jeju Island

Hwa Hyun Lee[1], Suam Kim[1], and Chul Park[2]

[1]Department of Marine Biology, Pukyong National University, Busan, Korea, 608-737

[2]Department of Oceanography and Ocean Environmental Sciences,
Chungnam National University, Daejeon, Korea, 305-764

Common squid is one of the most important commercial species in the Northwestern Pacific countries, and its population and catch are known to be influenced by environmental changes (e.g., seawater temperature) in the surface layer of the ocean. The East China Sea is a major spawning ground for several cephalopods, and the investigation on larval distribution of squids was carried out around Jeju Island. Cephalopod larvae were collected using an 1 m^2 MOCNESS sampler during April 1999 and October 2000. Water column was vertically divided by 20 m interval from the surface to 120 m or bottom. Total numbers of larvae collected were 235 and 193 in April 1999 and October 2000, respectively. Collected cephalopod larvae were sorted and identified. Four Families of the Cephalopod were identified: Family Sepiolidae, Enoploteuthidae, Ommastrephidae, and Octopodidae. Common squid (*Todarodes pacificus*) paralarvae of Family Ommastrephidae was a dominant species in spring (193 individuals, 65%) as well as fall (103 individuals, 53.4 %) surveys. More than 90 % of common squid paralarvae were found in mixing water of southestern Jeju Island. Most paralarvae were founded in 20-80 m depth in April 1999 and 0-60 m depth in October 2000. The mean sea water temperatures, where the most larvae existed, were 15.4°C and 21.4°C in April 1999 and October 2000, respectively.

Key word: Cephalopod, ommastrephidae, common squid, paralarvae, vertical distribution

OP-22

Expressions of several reproduction-related genes are suppressed by a neurokinin B-related peptide in mature female Nile tilapia

Ye Hwa Jin, Jin Woo Park, Jung Hyun Kim, Woo Sik Kim,
Hyun Kyu Kim and Joon Yeong Kwon
Department of Aquatic Life Medical Sciences, Sunmoon University

Neurokinin B (NKB) and neurokinin B related peptide (NKBRP) belong to tachykinin peptide family. They act as a neurotransmitter and/or neuromodulator. Mutation of NKB and/or its cognate receptor, NK3R resulted in hypogonadotropic hypogonadism in mammals, implying a strong involvement of NKB/NK3R system in controlling mammalian reproduction. Teleosts also possess NKB, but its roles are not as clear as in mammals. In this study, NKB and NKBRP coding gene (tac3) was cloned in Nile tilapia and the sequence was analyzed. Based on the sequence, Nile tilapia NKB and NKBRP peptide were synthesized. These synthetic NKB and NKBRP were injected (20 pmol/gBW) into mature female tilapia intraperitoneally to investigate its effect on the reproductive axis. After the injection, several important reproduction-related genes were analyzed using qRT-PCR. Plasma levels of E2 and 11-KT were measured by ELISA. Both NKB and NKBRP had no effect on the plasma level of sex steroids. However, NKBRP induced declines of expression level of GnRH I, Kiss2, tac3, and VTG mRNAs while NKB seemed to have no distinct effect except for resulting in the decrease of VTG mRNA. These results indicate that the roles of NKB and NKBRP in this fish may be associated with reproductive processes although their exact functions are not clear at the moment.

OP-23

Relationship of site-specific maximum sustainable yield of turban shell (*Batillus cornutus*) with algal standing stock biomass along the coast of Jeju Island, Korea

Seok-Beom Hong[1]*, Seungmok Ha[1], Byungyeob Kim[1], Sukgeun Jung[1]
[1]College of Ocean Sciences, Jeju National University

Turban shell (*Batillus cornutus*) distribute in the southern part of the East Sea, coast of Jeju Island of South Korea, southern coast of Japan, and the Yellow Sea. It has been one of the most economically important marine living resources in Jeju island, but its annual catch has dramatically decreased, and consequently it has been managed by the total allowable catch since 2000. However, the causes of the declining catch are not yet certain. To evaluated the Influence of environmental and biotic conditions on the declining stock, we investigated relationships of the site-specific catch and the maximum sustainable yield (MSY) of the turban shell with respect to the distribution and biomass of thalloid algal (*Amphiroa anceps*) and brown algal species (*Ecklonia cava*) at 100 fishery sites of Jeju island, by compiling monthly catch and fishing effort of divers based on the monthly log books of turban shell fishery from 2001 to 2010. Then, we related the MSY with depth-specific biomass of the two algal species at the site. The site-specific catch and MSY tended to be high in the southern and northeastern areas where the biomass of the brown algal species was generally higher, but low in the northwest area of Jeju island. Therefore, to understand the causes of declining stock of turban shell, a long-term program is required to monitor the status of algal species and environmental and human factors that impact on them.

OP-24

Differences in growth of young sea bass, *Lateolabrax japonicus* from eelgrass beds in Gamak and Yeoja bays of southern coast of Korea

Jin-Koo Kim[1*],Jung-HwaRyu[2],JeongBaeKim[3],Won-ChanLee[3]andHyongChulKim[3]

[1]Department of Marine Biology, Pukyong National University

[2]Ryujunghwa Marine Research Institute

[3]National Fisheries Research and Development Institute

We analyzed growth characteristics of young sea bass (*Lateolabrax japonicus*) collected from the two adjacent eelgrass beds (Gamak and Yeoja bays) in southern coast of Korea between April and December 2006, and compared them with marine environments. A total of 171 individuals and 196 individuals of young sea bass were collected from Gamak and Yeoja bays respectively, using a dragnet (15 meters in length and 3 meters in width). Growth rate of young sea bass in Yeoja bay was higher than that in Gamak bay. Occurrence period of young sea bass in Yeoja bay was between April and July, but that in Gamak bay was between April and December. The two adjacent eelgrass beds were different in density and biomass of eelgrass. The density of eelgrass in Yeoja bay was higher than that in Gamak bay. However, the biomass of eelgrass in Yeoja bay was lower than that in Gamak bay except only in June. Such a difference might cause differences in growth of young sea bass even though the two adjacent eelgrass beds seems to be very similar.

OP-25

Reproductive ecology of an endemic Korean bitterling *Acheilognathus signifer* (Cyprinidae) between two populations

Hyeong-su Kim[1*], Hyun Yang[2], Jae-Geun Ko[3], Chi-Hong Kim[4], Jong-Young Park[1]

[1]Faculty of Biological Science and Institute for Biodiversity Research,
Department of Biological Science, Chonbuk National University, Jeonju, 561-756, Korea

[2]Institute of Biodiversity Research, Jeonju, 561-211, Korea

[3]National Institute of Ecology, Seocheon, 325-813, Korea

[4]Central Inland Fisheries Research Institute, Cheongpyeong, 477-815, Korea

For *Acheilognathus signifer*, an endemic Korean bitterling designated as one of endangered wild animals and plants in Korea, this study attempted to analyze the reproductive ecology for using host mussels between two populations. The survey was investigated in two populations where the bitterling and mussel coexist as follows: 1) Goesan population (Cheongcheon-myeon, Goesan-gun, Chungcheongbuk-do, Korea); 2) Danyang population (Eosangcheon-myeon, Danyang-gun, Chuncheongbuk-do, Korea) during the spawning season from 2011 to 2014. In the the Goesan population, there were three species of bitterling (*A. signifer*, *A. lanceolatus*, and *A. yamatsutae*) and four species of bivalve mussel (*Lamproturla leai*, *Unio douglasiae sinuolatus*, *Anodonta arcaeformis flavotincta*, *Lanceolaria grayana*). For Danyang population, however, it had the only species of bitterling *A. signifer* and one species of bivalve mussel *U. d. sinuolatus*. *A. signifer* most preferred *Lamprotula leai* in the Goesan population and used only *U. d. sinuolatus* in the Danyang population. The standard length of *A. signifer* in the two populations was similar. The ovipositor length, the number of mature egg and the egg size of *A. signifer* in the Goesan population was relatively greater than those of Danyang population. *A. signifer* in the Goesan population laid its eggs deeper in the gill chamber of mussels than those of Danyang population. In the present study, *A. signifer* showed several host adaptations for its ovipositor length, egg shape and the number of mature eggs released into particular mussel species related as a host.

OP-26

Population structure of the flathead mullet, *Mugil cephalus* in the Korean waters using morphological and molecular methods

Seung Eun Bae[1*],Jin-KooKim[1]andLiChenhong[2]
[1]Department of Marine Biology, Pukyong National University
[2]Shanghai University

Mugil cephalus is known as the most widespread species among the family Mugilidae. In spite of its wide distribution and its numerous related *Mugil* species, a single scientific name of *M. cephalus* is treated as valid today because of few or no morphological traits distinguishing them. However, recently, Durand et al. (2012) suggested that globally-distributed *M. cephalus* comprises 14 different lineages based on mitochondrial DNA COI, 16s rRNA and Cyt b sequences. Among them, 3 lineages exist in the Northwest Pacific (Shen et al., 2011). The purpose of this study is to clarify how many lineages exist in the Korean *M. cephalus* using morphological and molecular methods. A total of 188 individuals of *M. cephalus* from six local populations in Korea (Goseong, GS; Busan, BS; Yeosu, YS; Wando, WD; Buan; BA, Jeju Island, JJ) and 8 individuals of *M. cephalus* from Shanghai in China were used in this study. Counts (7) and measurements (21) were analyzed using Kruskal-Wallis test and canonical discriminant analysis (CDA) in SPSS program. Mitochondrial DNA COI and 16s rRNA sequences were analyzed in MEGA, Arlequin and BEAST programs. Morphologically, six local populations (GS, BS, YS, WD, BA, JJ) were similar in most of counts, but in measurements, only JJ population showed higher average value than others in percentage of head length to standard length (25.53 in GS, BS, YS, WD, BA vs. 28.84 in JJ), body depth (20.08 vs. 27.93), and caudal peduncle depth (9.07 vs. 10.54). CDA results showed that only JJ population was clearly separated from others in axis 1 (highest contributor: caudal peduncle depth). Genetically, neighbor-joining tree and Baysian inference showed that *M. cephalus* individuals were well divided into two lineages, almost matched Shen et al. (2011). One lineage was widely distributed in all 7 locations examined here, but the other lineage was limitedly distributed in JJ population and Shanghai population. Our findings suggest that there may exit a biogeographic boundary between the two lineages of *M. cephalus.*

OP-27

Seasonal variation in species composition and abundance of larval and juvenile fish assemblages in the coastal water of Gadeok-do, Korea

Hyeon Ji Kim[1*], Jae Mook Jeong[1], Joo Myun Park[2], Sung Hoi Huh[2], and Gun Wook Baeck[1]

[1]Department of Marine Biology & Aquaculture/Institue of Marine Industry, Gyeonsang National University, Tongyeong 650-160, Korea

[2]Department of Oceanography/Korea Inter-University Institute of Ocean Science, Pukyong National University, Busan 608-737, Korea

Gadeok-do is an influenced environment of estuary where development is continuously improving recently. The purpose of this study is to examine the seasonal variation in species composition and abundance of larval and juvenile fish assemblages in the coastal water of Gadeok-do. This study was performed monthly from October, 2010 to September, 2011 using RN80. During the study period, 46 species of larval and juvenile fishes representing 26 families, 9 orders were collected. The dominant species were *Clupea pallasii*, *Hexagrammos otakii*, *Pholis fangi*, *Engraulis japonicas*, and *Konosirus punctatus*. These five species accounted for 75.75% of the total number of individuals collected. The number of species, number of individual and species diversity indices changed with the seasons. The most number of species and individual occurred in January and February, respectively. Principal Component Analysis (PCA) and correlation analysis showed that variation in monthly water temperature could act as an indicator of seasonal variation in community structure and abundance of dominant species; in particular, those of *C. pallasii* and *H. otakii* corresponded with the water temperature.

OP-28

Molecular phylogenetic relationships and evolution of the family Rajidae inhabiting the Korean waters

Dageum Jeong[1,2], Sung Kim[1,2], Choong-Gon Kim[2],
Youn-Ho Lee[1,2]

[1]Marine Biology Department, University of Science and Technology, Korea
[2]Marine Ecosystem Research Division, Korea Institute of Ocean Science and Technology

Despite wide interest in the group of batoids, there is no molecular phylogenetic analysis of Rajidae inhabiting the Korean waters. A comprehensive genus-level sampling (> 60% species-level) was made from the genera *Okamejei, Dipturus, Hongeo, Raja, Bathyraja* for the analysis of intergeneric relationships. Using 13 Protein coding genes (PCG) of mitochondrial genome and 2 nuclear genes (RAG1, SCFD2) from 40 species including other family of batoids and one shark as an outgroup, are resolved most relationships with high confidence of Rajidae family inhabiting the Korean waters. The resulted phylogeny is compared with the previous morphological and genetic studies showing relationshipsamong Rajidae. Moreover the full time-calibrated tree of Rajidae evolution is investigated using 9 fossil information as well as molecular data. Rajidae represent an older group that originated ~ 69.5 Ma (K/T boundary), with most diversification occurring since the early miocene (~ 23.5Ma) related with the radiation of other marine biota. In addition, a hypothesis of the negative correlation between depths and divergence times of skates in the Korean waters is suggested.

OP-29

The effects of Nickel on biochemical, immune and antioxidant responses in the abalone, Haliotis discus hannai during thermal stress

°Yong-Joo Cha, EunYoung Min, Jung Sick Lee*, Inn-Sil Kwak**,
Jae Won Kim***, Ju-Chan Kang
Department of Aquatic life medicine, Pukyong National University, Busan 608-737
*Department of Aquatic life Medicine, Chonnam National University, Yeosu 550-749, Korea
**Faculty of Marine Technology, Chonnam National University, Yeosu 550-749, Korea
***Department of Marine Life-Science, Gangwon Provincial College, Gangneung 210-804, Korea

Recently, climate change has been implicated in the increasing frequency and severity of disease outbreaks in marine environments. Nickel is often found in the coastal environment as a result of industrial discharges and excess contamination is hazardous to aquatic ecosystems due to its persistence and bioaccumulation (Eisler, 1998; Bowser et al., 1994). The immune defense system of mollusks mainly depends on innate immunity and more specifically on hemocytes circulating in the hemolymph, which are also thought to be important anti-microbial effectors in invertebrates. The important roles of hemocytes in the invertebrate defense system was phagocytosis and lysozyme activity, anti-inflammation, wound repair and the production of reactive oxygen species (ROS). The antioxidant enzymes are the first line of defense against ROS and include superoxide dismutase (SOD), catalase (CAT), glutathione (GSH) and glutathione S-transferase (GST). The purpose of this study was to study the combined effects of water temperature and a metal, nickel on the biochemical, immune-toxicological and antioxidant response of the abalone, *Haliotis discus hannai*.

Nickel chloride concentrations were 0, 100, 200 and 400 μg/L, Each temperature were set at 18℃, 22℃ and 26℃ during 3 weeks. Total hemocyte counts were calculated using a hemocytometer. Lysozyme activity was measured by modified method of Hutchinson et al (1996). Phenol oxidase activity was measured by the method of Asokan et al (1997). In vitro phagocytosis was performed using Assay kit (Cell biolabs, Inc). Ca, Mg, ALP-S Albumin, Glucose, and Total protein assay were performed using a diagnostic kit (Asan Pharm, Co., Ltd, Korea). SOD and CAT were performed using Assay kit (Cell biolabs, Inc). GSH and GST was measured according to method of Beutler et al (1963) and Habig (1974), respectively. Statistical analysis of the results was performed with the aid of SPSS/PC+ statistical package. ANOVAs and the Duncan's test for multiple comparisons were used to test the significant differences between the control and treatment ($P<0.05$).

Eisler R. 1998. Nickel hazards to fish, wildlife and invertebrate: a synoptic review. US Geological Survey, Biological Resources Division, Biological Science Report, 1998-2001.

Bowser DH, K Frenke and JT Zelikoff. 1994. Effects of In vitro nickel exposure on the macrophage-mediated immune functions on rainbow trout (*Oncorhynchus mykiss*). Bull. Environ. Contam. Toxicol. 52, 367-373.

OP-30

The Kinetic analysis of oxytetracycline residues in abalone, *Haliotis discus hannai*

°NaYoung Kim[1], Kyoung-Mi Won[2], Hee-Sung Joo[1], BoYoung Jee[1], Myoung-Ae Park[1]
And JinWoo Kim[3]

[1]Aquatic Life Disease Control Division, NFRDI, Busan 619-705, Korea

[2]Southeast Sea Fisheries Research Institute, NFRDI, Tongyeong 650-943, Korea

[3]Pathology Division, NFRDI

Oxytetracycline (OTC) has been widely used aquaculture as a therapeutic and prophylactic agent because of its broad-spectrum activity against gram-positive and negative bacteria.

The residue of oxytetracycline (OTC) studied after spray treatment to cultured abalone, *Haliotis discus hannai.* Muscle concentration of OTC were determined after spray treatment (4000, 7000, 1000 ppm) in abalone. Muscle sample were taken at 1, 3, 7, 14, 21 30, 60, 90, 120, 150, 180, 210, 240, 270, 300, 330 and 360 day post-dose. OTC analyses were carried out by high performance liquid chromatography (HPLC). In spray of 4000, 7000 and 1000 ppm of small size abalones, those of OTC which observed at 1 day post-dose, were dramatically decreased at 8.34, 3.35 and 4.47 ug/g, respectively. OTC concentration of medium size abalones were measured 7.58, 15.62 and 7.8 ug/g, respectively. Large size abalones also were observed 11.31, 12.38 and 15.28 ug/g, respectively, at 1 day post-dose. No significant differences in residue depletion of OTC in muscle were observed between size of abalones. More than 0.2 mg/kg of OTC was detected in muscle tissues and the residues were found over 60 day after treatment.

These results reflect to improve the recommendation withdrawl period of OTC for safety.

OP-31

Antibacterial effects of Chitosan-silver nanocomposites (CAgNCs)

°Dananjaya S.H.S[1], Jin-young Choi[1], Seung Beom Seo[2], Sung-Ju Jung[3], G.L. Godahewa[4], Jehee Lee[4] and Mahanama De Zoysa[1]

[1]College of Veterinary Medicine, Chungnam National University, Yuseong-Gu, Daejeon, 305-764.

[2]College of Life Sciences, Sejong University, Gwangjin-Gu, Seoul, 143-747.

[3]Department of Aqualife Medicine, Chonnam National University, Yeosu 550-749

[4]School of Marine Biomedical Sciences, Jeju National University, Jeju Special Self-Governing Province, 690-756

Chitosan is a cationic and biocompatible polysaccharide derived from the deacetylation of chitin. Recently hybrid materials developed with silver nanoparticles and biodegradable polymers such as chitosan have shown strong bioactive properties. Therefore application of chitosan based silver nanocomposites (CAgNCs) would be a choice for developing efficient antimicrobial agents as well as biomedical applications.

In this study stable CAgNCs were synthesized by ionic gelation method and characterized their physical, chemical properties. The results show that particle size of CAgNCs varies from 100–500 nm. The average size of loaded Ag particles on chitosan was in between 15-35 nm. UV spectrum of CAgNCs clearly indicates the maximum absorbance peak at 415 nm which is characteristic peak for silver nanoparticles. Fourier transform infrared (FTIR) spectrum analysis revealed that CAgNCs has an amino group (NH_2), hydroxyl group (OH^{-1}), and amide ($CONH_2$) as three types of functional groups.

Antimicrobial activities of CAgNCs were investigated with pathogenic bacteria *Vibrio salmonicida* as a model. Using agar diffusion and tubidimetric assays we showed that CAgNCs can inhibit the growth of *V. salmonicida* in concentration dependant manner. The minimum inhibitory concentration (MIC) value against *V. salmonicida* was 50 µg/mL. Field emission scanning electron microscopy (FESEM) image confirmed the lysis and killed *V. salmonicida* cells after CAgNCs treatment. FESEM equipped with an energy dispersive X-ray spectrum (EDS), revealed the penetrated silver nanoparticles in *V. salmonicida* cells. Overall results from this study emphasize the potential of CAgNCs as alternative to antibiotics and other therapeutics applications.

OP-32

Identification of the causative agent of soft tunic syndrome of the sea squirt *Halocynthiaroretzi* on the southern coast of Korea

°Kyung-Il Park[a] , Kwan-Ha Park[a], Yun-Kyung Shin[b]

[a]Department of Aquatic Life Medicine, College of Ocean Science and Technology, Kunsan National University, 558 Daehakno, Gunsan 573-701, Republic of Korea

[b]National Fisheries Research Institute, Busan 619-705, Republic of Korea

Soft tunic syndrome (STS) of the edible sea squirt *Halocynthiaroretzi*has been recognized since the 1990's in the southern and eastern seas of Korea and has caused large economic losses. However, the causative agent in these regions was unknown. Accordingly the present study intended to identify the causative agent of the STS by isolation of flagellates from the STS diseased sea squirts and conducting challenge test if the microorganism meets the Koch's postulates.In the present study, twokinetoplastid organisms were isolated from STS sea squirts collected from culture farms in Tongyeong located in the East Sea of Korea. Phylogenetic analysis of 18S rRNA sequences identified these organisms as *Azumiobodohoyamushi*strain FA and *Procryptobiasorokini* strain FB. These kinetoplastids were injected into healthy sea squirts and cultured at 15 ºC for 13 days. Sea squirts injected with *A. hoyamushi* showed 100% STS whereas, *P. sorokini* did not induce disease, thereby confirming *A. hoyamushi* as the causative agent of STS. *Azumiobodohoyamushi*survived*in vitro* in between 10–15 ºC, and died at temperatures below 5 ºC or above 20 ºC. Salinities between 30–35 psu showed the best growth but, death occurs below 25 psu. Real-time qPCR, a quantitative diagnostic method, revealed that occurrence of STS varied identified according to the infection intensity *Azumiobodohoyamushi,* and early infection and the highest infection intensity were observed from the siphons of sea squirts. Finally, identification of *Azumiobodohoyamushi*as the causative agent of STS will be further used to develop techniques for management of STS.

OP-33

Effect of water temperature on the mortality in *Megalocytivirus*-infected rock bream (*Oplegnathus fasciatus*) and development of protective immunity

°Myung-Hwa Jung[a,b], Myung-Joo Oh[a], Sung-Ju Jung[a,b]

[a]Department of Aqualife Medicine, Chonnam National University

[b] Aquatic Animal Hospital, Chonnam National University

Rock bream are highly susceptible to rock bream iridovirus (RBIV), which belongs to the genus *Megalocytivirus*. The rock bream injected with RBIV and held at 17°C survived evenafter water temperature was progressively increased to 26°C at 100 dpi indicates that at 17°C condition, rock bream can recover from viral infection and remained virus in the fish body is not active again in susceptible water temperatures. Conversely, all infected fish held at 29, 26, 23 or 20°C had 100% mortality with death more rapid at higher water temperatures. This indicates that the rock bream is very sensitivity to RBIV and it is difficult to avoid the mortality once they exposed to RBIV at high water temperature conditions (over 20°C). However, mortality due to RBIV infected rock bream at susceptible water temperature (23°C or 26°C; 100% mortality condition), could control by reducing water temperature to 17°C (mortality free condition) during very early stages of infection. Rock bream exposed to virus and held for 2, 4and 7 days at 23/26°C before water temperature was reduced to 17°C had mortality rates of 26.6/73.2%, 66.6/100% and 93.4/100%, respectively, through 100 dpi. Survived fish obtained after water temperature increased from 17°Cto 26°C at 100 dpi and then re-exposed to high virus concentration showed high survival rates (80.2/100%, second/third infection, respectively), while 100% of mortality was observed in previously virus un-exposed fish. From this results, it can be concluded that immune defense system of survived fish can induce protection by re-infection of RBIV and manipulation of water temperature offers a good strategy to control the disease.

OP-34

Fishing performance of the biodegradable tubular pots for catching the conger eel *Conger myriaster*

Seonghun Kim*, Seong-Wook Park, Kyounghoon Lee, Ji-hyun Lim, Hae-Sun Choi
[1]Fisheries System Engineering Division, NFRDI

Lost or abandoned fishing gear made of synthetic fibers or plastics do not decompose in the sea. These result in “ghost fishing,” retaining their function as fishing gear. To solve these problems, we developed fishing gear made of aliphatic polyester (PBS/PBAT), which is biodegradable by microorganisms after a certain period. The marine fishing performances of biodegradable-material tubular pots for conger eel were compared with those for commercial pots in the southern coastal sea of Korea where loss rates are high. A comparative analysis of the elastic recovery according to funnel material was conducted. Two types of fishing gear were made: a pot whose body and funnel were made of biodegradable materials and a commercial pot made of recycled polyethylene (PE). Then, field experiments were conducted after arranging the two types alternately. The funnel rips made of biodegradable materials showed better elastic recovery than the other type. Biodegradable pots showed marine fishing performance similar to that of commercial pots (Mann Whitney test, $p > 0.05$). Similarly, there was no significant difference in the catch per unit effort (Mann Whitney test, $p > 0.05$). Thus, biodegradable materials are an environmentally friendly alternative to recycled PE, to fabricate tubular pots for conger eel.

OP-35

Design and Test of a Triple Topless Shrimp Trawl by Simulation software and Flume tank

OLUBIYI Olukayode Abiodun[1] and Chun Woo LEE[2]

[1]Department of Fisheries Physics, Pukyong National University, Busan 608-737, Korea

[2]Division of Marine Production System Management, Pukyong National University, Busan 608-737, Korea

A traditional bottom trawl was simulated with Marine Production System Laboratory (MPSL) simulation software while the 1:20 scaled model was tested based on Tauti's law in the Pukyong National University flume tank.

The model top panel (square and first belly) which represents 22.5 % of the total twine area was removed, and the topless model re-tested in the flume tank. The drag of the covered net was 27 % and 9 % higher than the topless at 1 m/s and 1.5 m/s respectively. The measured drags from the two scaled nets were higher than the simulated value for the full-scale net by 17 %, 35 % and 38 % for the covered trawl, and 14 %, 19 %, and 30 % for the topless trawl at the three towing speed of 1,1.25, and 1.5m/s respectively.

On the basis of the result, a triple topless trawl and a covered twin trawl were designed and simulated. The simulated triple topless trawl was compared with twin and single trawl with the same total twine area. The simulated triple trawl wing end opening was 12 % to 14 % wider than the twin trawl at all the towing speeds. The triple trawl swept as much as 16.7 %, 34.4 %, and 28.03 % volumes more than twin trawl and 16 %, 38.8 % and 39 % volume more than the single trawl at 1, 1.25, and 1.5 m/s respectively. The triple topless trawl met the goal of wider horizontal spread.

We expect the triple topless shrimp trawl will assist to minimize bycatch, and optimize trawling power.

OP-36

The development of a bycatch reduction device for offshore dredging and the performance estimation of model net

Doo-Jin HWANG[1]*, Ok-Sam KIM[1], Hyun-Chool SHIN[1], Eun-A YOON[1],
Hae-Hoon PARK[2], Chang-Doo PARK[2], Gwang-Je PARK[3]
[1]Division of Marine Technology,Chonnam National University
[2]Fisheries System Engineering Division, National Fisheries Research Development Institute
[3]Samsin Fishing Gear

Recently, the reduction of dumping and bycatch in fisheries was issued as an important global project. In October 1995, the FAO adopted international behavior rules for responsible fisheries. The FAO asked for the development of fishery technology to reduce bycatch of juvenile and non-target organisms in all national fisheries after the FAO reported that 25% of all catches globally were dumped.In this study, a bycatch reduction device (BRD) was developed to reduce bycatch of non-target organisms in an offshore dredge fishery and estimate the performance making model net.

The offshore dredge BRD was designed to consider the fisheyes of non-target organisms. A separator was built to induce the escape of non-target organisms. A cover net was created in order to know when an organism escaped. A dredge produced fisheyes, and the separator and cover net base were on a standard dredge.A model net was designed to experiment with behavior characteristics. The size of the model net was reduced to 1/5 of the size of the full-scale dredge and was designed to size (1.6 m(W)×0.4m(H)) in a stainless steel frame. Themodel net was made to connect with and discerptible for triangle fisheye (10 cm (L) × 15 cm (W)) at the top of the codend. This experiment was performed in a circulating water channel (25.1 m (L) × 4.5 m (B) × 8.3 m (H)) at the National Fishery Research&Development Institute on 20–22 February 2012. The experiment of behavior characteristics measured variations in shape and the current speed rate of the model net according to changes in the current speed for the attached fisheye and non-attached fisheye.

The shape of the model net and the resistance net increased the towing speed to 0.2–0.8 m/sec (interval 0.2 m/sec) around the model net in the circulating water channel; that is, the change inthe model net's shape increased the towing speed. The model net appeared to float from the center of the cylinder to the cod end. When the current speed was changed around the fisheye by increasing the towing speed of the model net at the non-attached fisheye, the current speed increased from 50% to 65%. The current speed rate of the fisheye attached to the model net decreased by increasing the towing speed, and large variations in the current speed rate at the entrance and middle of the fisheye were not observable. Therefore, non-target organisms can escape because of the increase in towing speed outside the net, not inside the net.

OP-37

Fishing experiment using a developed offshore dredge bycatch reduction device

Doo-Jin HWANG[1]*, Ok-Sam KIM[1], Hyun-Chool SHIN[1], Eun-A YOON[1],
Hae-Hoon PARK[2], Chang-Doo PARK[2], Gwang-Je PARK[3]
[1]Division of Marine Technology, Chonnam National University
[2]Fisheries System Engineering Division, National Fisheries Research Development Institute
[3]Samsin Fishing Gear

Bycatch shellfish and bottom fish are benthic organisms that are caught in offshore dredge fisheries because of bottom trawling. In this study, a bycatch reduction device (BRD), which catches shellfish only, not other organisms, was developed to reduce bycatch of non-target organisms at an offshore dredge fishery. To estimate the performance of this BRD, the device was used at an accomplished test fishing operation.

The offshore dredge BRD was designed to consider the fisheyes of non-target organisms. A separator was built to induce the escape of non-target organisms. A cover net was created in order to know when an organism escaped. A dredge produced fisheyes, and the separator and cover net base were on a standard dredge.To estimate the performance of this fishing gear, six test fishing operations were performed during one day in December 2011 and one day in January 2012 in the offshore sea Gunsan: ① square mesh window (40 cm mesh bar, 1.5 m (L) × 1.0 m (W)) at the top and in front of the cod end, ② triangle fisheye (1.5 m (L) × 1.0 m (W)) and separator (20 cm mesh bar, 45° tilt angle) ③ triangle fisheye (1.5 m (L) × 1.0 m (W)) and separator (12 cm mesh bar, 45° tilt angle), ④ triangle fisheye (1.5 m (L) × 1.0 m (W)), ⑤ square mesh window (15 cm mesh bar, 2.0 m (L) × 1.0 m (W)) at the top and in front of the cod end, and ⑥ square mesh window (10 cm mesh bar, 2.0 m (L) × 1.0 m (W)) at the top and in front of the cod end. A survey was used to attach the developed BRD to the dredge using a piscator. The dredge-attached BRD was towed for nearly one hour and a speed of three to four kts was maintained. Organisms were caught in the cod net, cover net, and separator in the order of the fishing operation. Organisms' length and weight were measured.

The escape rate (individual criterion) of shellfish in classification BRD was the most high in the attached square mesh window (10 cm mesh bar) at the top of the cod end and was the most low in the attached square mesh window (40 cm mesh bar) at the top and in front of the cod end. The escape rate (individual criterion) of available organisms was the most high in the attached square mesh window (15 cm mesh bar) at the top of the cod end and was the most low in the attached square mesh window (40 cm mesh bar) at the top and in front of the cod end. In the case of the attached triangle fisheye (1.5 m (L) × 1.0 m (W)) at the top of the cod end and the separator to induce fish escape (12 or 20 cm a mesh bar), the escape rate was high for available fish and low for shellfish.

OP-38

Bandwidth Enhancement of a Broadband Ultrasonic Mosaic Transducer using 48 Tonpilz Transducer Elements with 12 Different Resonance Frequencies

Dae-Jae LEE
Division of Marine Production System Management,
Pukyong National University, Busan 608-737, Korea

This paper describes the design and performance characteristics of a broadband ultrasonic mosaic transducer with a focus on the improved bandwidth in the high frequency band of a previously designed broadband ultrasonic transducer (Lee et al., 2014). The improvement in the pulse-echo bandwidth was achieved by employing twelve 2x2 element subarrays operating at different resonance frequencies and utilizing the concept of mosaic array. The results indicated that the -6 dB and -12 dB bandwidths of the newly developed broadband ultrasonic mosaic transducer, when compared to the previously designed ultrasonic transducer, were increased up to 155% with a quality factor of 1.71 and 170% with a quality factor of 1.25, respectively. The averaged TVR (transmitting voltage response), SRT (receiving sensitivity) and FOM (figure of merit) values in a nearly flat transmitting response band from 45 kHz to 105 kHz providing a -12 dB bandwith of 60 kHz were 163.3 dB (re 1μPa/V at 1m), -192.8 dB (re 1V/μPa) and -30.9 dB, respectively.

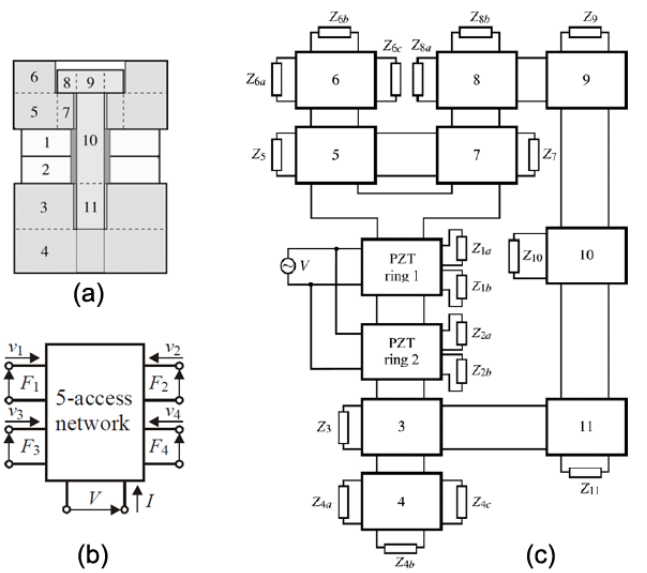

Fig. 1. Geometric diagrams of design model (a), a five port network of a single piezoelectric ring (b) and the three-dimensional matrix model (c) of a single tonpilz transducer for use in the development of a broadband ultrasonic mosaic transducer. The number of network element in the matrix model indicates the one in the design model.

OP-39

Distributional characteristics of anchovy schools and the trial of anchovy species identification

Myounghee Kang[1*], Taeg Yun Oh[2], Young Il Seo[2]

[1]Department of Maritime Police and Production System, Gyeonsang National University
[2]Fisheries Resources Management Division, National Fisheries Research and Development Institute

Distributional characteristics of anchovy schools in the Southern Sea of South Korea were examined by using acoustic data collected on April 16-19, July 4-8, and September 30-October 3 2013, along with catch data from trawls. In particular, distributional characteristics were investigated by following the cruise track lines, which were pre-set from the coastal sea to the offshore sea. The echosounder of the Simrad EK60, including 18, 38, 70, 120 and 200 kHz was used, and the middle water trawl net was used. In understanding the distributional and ecological characteristics of anchovy, and to estimate their biomass, it is very important for anchovy species to be discriminated from other species. Therefore, anchovy species were sought to be acoustically identified using various characteristics of anchovy schools. First, the morphological, positional, and energetic characteristics of the anchovy schools were extracted. In detail, the morphological characteristics of the schools were described using the length, height, area, and image compactness of the fish schools. The positional characteristics, that is, their (anchovy schools) distributional depth and altitude were used. Also, the energetic characteristics, that is, their mean S_V were used. Frequency characteristics of fish schools using the dB difference so called Δ MVBS (Mean Volume Back-scattering Strength) method were examined. To optimize the dB difference method to distinguish the anchovy from other species, three different cell sizes such as 0.1 nmi x 2 m, 0.25 nmi x 4 m, 0.5 nmi x 5 m were used. Lastly, statistic methods such as t-test and one way ANOVA (analysis of variance) were used to verify the result of the anchovy species identification.

OP-40

Distribution and Density of Coastal Fish in the Asan Bay, Korea, estimated Hydroacoustic Survey

Hyungbeen Lee[1,2], Donhyug Kang[1], Yangjae Im[3], Kyounghoon Lee[2]

[1]Maritime Security Center, Korea Institute of Ocean Science & Technology (KIOST)

[2]Fisheries System Engineering Division, National Fisheries Research & Development Institute (NFRDI)

[3]Fisheries Resources and Environment Division, National Fisheries Research & Development Institute (NFRDI)

Asan bay has important region from Yellow Sea coastal ecosystems, Korea, because it serves as an habitat for a variety of coastal and migratory fish, especially known for fish spawning and nursery ground. In this study, the distribution and density of coastal fish species were estimated from hydroacoustic survey and net catches in the Asan bay. The acoustic data were collected with 38 and 200 kHz conducted from July to October of 2012 and 2013, and converted to nautical area scattering coefficient (*NASC*, $m^2/mile^2$) for 0.25 n·mile along 10 transects. Japanese anchovy (*Engraulis japonicus*) was the dominant specie from stow net catches. The virtual echogram technique was used to distinguish between *E. japonicus* and other fishes base on the mean volume-backscattering strength differences (△MVBS) at 38 and 200 kHz.

E. japonicus and other fishes are mainly distributed in center channel and close to the outer Asan-bay, and *E. japonicus* tend to move outer Asan bay than inner toward summer and fall. Estimated mean density of *E. japonicus* and other fishes, estimated as follows that *E. japonicus* ranged from 0.13~1.40 g/m^2, and other fishes without *E. japonicus* ranged from 0.21~3.16 g/m^2 from July to October 2012 and 2013. The estimates of Anchovy density compared well with cumulative catch weight from stow net catches. The application of hydroacoustic method offers approach to understanding spatial/temporal structure and estimate the density of fish aggregations in the coastal area.

Key word: Hydroacoustic survey, Asan bay, Japanese anchovy (*Engraulis japonicus*), Spatio-temporal distribution

OP-41

The *in situ* TS estimation of *Aurelia aurita* using 38 kHz and 120 kHz frequencies

Eun-A Yoon[1]*, Doo-Jin Hwang[1], Kyoung-Hoon Lee[2]

[1]Division of Marine Technology, Chonnam National University

[2]Fisheries System Engineering Division, National Fisheries Research Development Institute

The scyphozoan jellyfish *Aurelia aurita*is found in mass occurrencesin many coastal watersworldwide. The echo counting hydroacoustic monitoring method is more effective than the echo integration method because the *A. aurita*population is densely distributed. The target strength (TS) of *A. aurita*is an important factor because echo integration is calculated simply by dividing the volume backscattering strength (SV) obtained in situ into the TS of *A. aurita*. The focus of this study is on understanding the in situ TS of *A. aurita* using a 38 kHz frequency and a 120 kHz frequency and the frequency difference between the two.A field survey of the mass occurrence of *A. aurita* was conducted on 18 September 2009 for one hour off Mokpo, South Korea. Acoustic data was collected using 38 kHz and 120 kHz frequencies (EK-60, Simrad). To discover the depth at which the *A. aurita* population was distributed, we used a Dual-frequency Identification SONar (DIDSON). The acoustic data collected in situ was interpreted using Echoview (version 4.0, Myriax). *In situ* TS was analyzed using the single detection function and the thresholds at 38 kHz and 120 kHz were set to -85 dB to minimize the signal-to-noise ratio (snr) and weak targets in sound scattering. We provide basic data to estimate the biomass and division of *A. aurita* insitu based on our study results about the TS and frequency difference of *A. aurita*using 38 kHz and 120 kHzfrequencies.

OP-42

Growth and mortality of juvenile common octopus, *Octopus vulgaris* in individual and group type-shelters by *in-situ* follow-up survey with passive integrated transponder (PIT) tags

°Inyeong Kwon[1], HyoyeongLee[1], SunjooMoon[1], Taeho Kim[2]

[1]Department of Fisheries Science, Graduate School, Chonnam National University

[2]Division of Marine Technology, Chonnam National University(kimth@jnu.ac.kr)

The common octopus (*Octopus vulgaris*) is considered a strong candidate for marine aquaculture due to its high growth rate and competitive market price. To investigate product potential, this study was conducted to evaluate the biological performance of four juvenile octopus shelter types for grow-out by*in-situ*follow-up survey. In this study, two shelter types were considered based on seclusion and protection which seem to be one of the major criteria when an octopus to chooses a particular den. One option included tube-type shelters withvolume of 0.005, 0.014 and 0.038$m^3$for individual rearing. The second option consisted of a pipe-type shelter with a total volume of 0.25 m^3, plate-type shelter with a total volume of 0.20 m^3, and hiding place-type shelter with a total volume of 0.25 m^3 for group rearing. The experimentswere performed near Yeosu, Korea in the water depth of 7 m for 90 days (2 April to 30 June, 2014).A total of 32 octopuses were used and fed a mixed diet containing sardine and crab at approximately5% of their body weight. Each specimen was acclimatized in separate shelters for 7 days to minimize the effects of biological interaction prior to the experiment. All octopuses reared in group type shelters were tagged with passive integrated transponder (PIT) on their upper left arm Ⅲ for follow-up survey of biological performance. At the beginning of the experiment, the average weight of juvenile octopuses was measured to be 487.42±105.87g in individual type-shelters and 475.71±131.39 g in group type-shelters. The seawater temperature and salinity were continuously measured with a logger-type CTD-Diver (Eijkelkamp). Dissolved oxygen and pH levels were also measured with a hand-held multi-probe YSI instrument (YSI 556MPS-20M) once every 3 days. The effects of the shelter typesand stocking densities on the growth of octopus were analyzed using regression analysis withEViews 4.0 from Quantitative Micro Software Corporation.

The results from experiments showeda higher mortality in tube-type shelters rather than in group typeones (pipe, plate and no hiding place-type shelter). On the other hand, the growth rates of individual octopus reared in tube-type shelters were higher than those of group type structures. A statistical significance value of $P<0.05$ was also determined indicating that the shelter types and stocking densities have significantly influence on survival and growth rates.

OP-43

Survival and growth rates of sea cucumber, *Apostichopus japonicas* (*S*elenka), shelter types for grow-out placed in flow-through seawater tank

°Sun-Joo Moon[1], Hyoyeong Lee[1], In yeong Kwon, Tae ho Kim[2]
[1]Departments of Fisheries Science, Graduate school,Chonnam National University
[2]Division of Marine Technology, Chonnam National University(kimth@jnu.ac.kr)

As the global population demand for aquatic food increases, new aquaculture techniques will be developed and further expanded, with possible intensification in many regions of the world. Sea cucumber aquaculture has increased in the last several years due to the exploitation and population depletion of natural stocks. To meet the increased demand of the *beche-de-mer* in the Asian market without eliminating the fishery, it became evident that aquaculture production of the sea cucumber was necessary. To investigate product potential, this study was conducted to evaluate the biological performance of three sea cucumber shelter types for grow-out within flow-through seawater tanks at Chonnam National University in Yeosu, Korea for 61 days (29 May to 30 July, 2013). In this study, two shelter types were considered based on hiding and color which seem to be one of the major criteria when a sea cucumber to chooses a particular shelter. One option included tube-type shelter made of fishing pots for eels with a total volume of 0.005 m^3 for separate rearing. The second option consisted of a PVC pipe-type shelter with a total volume 0.27 $m^3$for group rearingand no hiding place-type shelter with a total volume of 0.13 m^3 for control. During the experiment, a total of 200 sea cucumbers were used with an initial body wet weight of 64.68 ± 33.94 g and fed a mixed diet containing mineral, mud, etc. at approximately 3% of their body weight. The seawater temperatures ranged from 10.88 to 16.65°C,and salinity ranged from 34.68 to 32.26 psu. Data were analyzed with the statistical package SPSS v21.

The results from experiments showed that the specific growth rate was 0.19% day^{-1} in the pipe shelter, 0.21% day^{-1} in the tube-type shelterand 0.25% day^{-1} in no-hiding place shelter. The average percent survival in no hiding place-type shelter was 100% while in the pipe-type and tube-type shelter it was 87.6% and 48.6%, respectively. A statistical significance value of $P<0.05$ was also determined indicating that the shelter types and stocking densities have significantly influence on survival and growth rates. The next step is to conduct *in-situ* follow-up survey for growth of sea cucumber with visible implant elastomer (VIE) tags to investigate whether or not the sea cucumber shelters could be effectively incorporated in the aquaculture industry.

OP-44

Characteristic of upwelling in the southeast region of the East Sea in July, 2013

Yong-Kyu Choi[1*], Hee-Dong Jeong[1], Jeong-Min Shim[1],
Sang-Woo Kim[1], and Ki-Young Kwon[1]
[1]East Sea Fisheries Research Institute

Based on the sea surface temperature at the east coast of Korea and buoy data in Donghae(37°31′N, 130°00′E, 80 km east away from Donghae port) and Pohang (36°21′N, 129°46′E, 35 km east away from Gangu port), we examined the Ekman upwelling in the southwest region of the East Sea. Also, the serial oceanographic data were used to see the oceanographic conditions for June and August. The temperature in the coast was 3～8℃lower than the normal from 2 July. At Janggigab, the temperature was nearly 10℃lower than the normal in 8 July. The lower temperature continued to the middle of August at Janggigab. The wind speed was 6～11 m/s and the direction was south-southwest in 1 July. The wind speed amounted to 6～16 m/s in 2 July. It means that the strong wind induced the upwelling effect by a day. The temperature was lower than the normal at 20 m in depth of the East Sea in June and August. The air pressure was 996～998 hPa during June to August. It was the lowest air pressure during the studied period. The correlation was 0.3 between the temperature anomaly and air pressure. It was suggested that the appearance of cold water in the East Sea was influenced by the Ekman upwelling in the open sea due to wind and low air pressure as well as coastal upwelling in July, 2013.

OP-45

Growth change of *Sebastes inermis* by different wave length of LED light

Hyeon-Ok Shin[1*], Kyeong-Mi Kang[2], Min-A Heo[3], and Gyeom Heo[3]

[1]Division of Marine Production System Management, Pukyong National University

[2]Graduate School of Global Fisheries Science, Pukyong National University

[3]Department of Fisheries Physics, Graduate School, Pukyong National University

Experiments designed to measure the growth change of fry rockfishes (*Sebastesinermis*) by different wave length of LED light were conducted. Fry rockfishes (average body weight of individual: 1.13g) were divided into two groups by wave length of the LED light (light power: 1,620 mW; wave length: 518 nm, 622 nm). Triplicate groups of 120 individuals were reared over 7 weeks. Lighting duration was 14 hours from 6am to 8pm. A water tank exposed on the natural sun light in the room through the windows was used as a control. At results of 1st experiment (average body weight of individual: 1.13 g; standard deviation (SD): 0.13 g) conducted for 83 days from 6 April to 28 June 2013,the Test-B tank (518 nm) was shownthe fastest growth than Test-A tank and control. The relative growth rate of Test-B and Test-A were 0.022 and -0.107, respectively. At results of 2nd experiment (average body weight of individual: 5.07 g; SD: 0.70 g) conducted for 49 days from 15July to 2 September 2013 and 3rd experiment (average body weight of individual: 10.67 g; SD: 0.19 g) conducted for 74 days from 12September to 25November 2013,the Test-B tank (518 nm) was shown commonly the fastest growth than Test-A tank and control. The relative growth rate of Test-B and Test-Ain 2nd experiment were 0.192 and -0.110, respectively.The relative growth rate of Test-B and Test-A in 3rdexperiment were 0.163 and -0.229, respectively.

OP-46

Research Activity of ICES-FAO Working Group on the Fishing Technology & Fish Behaviour

Heui-Chun An

Aquaculture Industry Division, East Sea Fisheries Research Institute, National Fisheries Research & Development Institute

The ICES(International Council for the Exploration of the Sea) Working Group on Fishing Technology and Fish Behaviour (WGFTFB) was created in 1983. In 2002, the Food and Agriculture Organisation (FAO) joined with ICES to co-sponsor the WGFTFB, giving the working group a global mandate.

ICES-FAO WGFTFB focuses on all measurements and observations pertaining to both scientific and commercial fishing gears, design and statistical methods and operations, and the behaviour of fish in relation to fishing operations. WGFTFB initiate and review investigations of scientists and technologists concerned with all aspects of the design, planning, and testing of fishing gears used in abundance estimation, selective fishing gears for bycatch and discard reduction, as well as environmentally benign fishing gears and methods with reduced effect on the seabed and other non-target ecosystem components. (WGFTFB. "ICES-FAO Working Group on Fishing Technology and Fish Behavior." Web. 1 June 2014 <http://www.ices.dk/community/groups/Pages/WGFTFB.aspx>.)

WGFTFB metfrom 5-9 May 2014 in New Bedford MA, USA to address the four terms of reference: 1. Dynamic Catch Controls, 2. Artificial Light in Fishing, 3. Relationships among vessel characteristics and gear specifications in commercial fisheries, 4. Technological Innovation in Spreading Trawls

The main outcomes are detailed below.

The Dynamic Catch Control topic group, formed in 2013, devised dynamic catch control devices which can stop collecting fishes when desired amount of fish enters the retention part of the gear and keeps themunderthe least level of mortality.

The Artificial Light topic group formed in 2012 discussed about the applications of artificial light on fishing gear design and its operations. The group aims to summarize response of fishes to artificial light stimuli, use of artificial light in fisheries worldwide, andthe features of different types of fishing lamp.

One of the noticeable presentationsduring the meeting was the Selective Fishing and Balanced Fishing'. The speaker emphasized the importance of BalancedFishing overSelectiveFishing considering the structure of the ecosystem, biodiversity conservation and sustainable fishing. More discussion about the establishment of the concept, methods of research, and study over past case is needed.

WGFTFB will meet in Lisbon, Portugal from 4th to 8th of May 2015. Members can present their research on various fields related to fishery technology at the Open Session. The chair calls upon scientists over Asia, including Korea, to join the meeting.

OP-47

Physiology of the mussel *Mytilus galloprovincialis* two years after the *Hebei Spirit* oil spill

Ludovic Donaghy[1], Hyun-Ki Hong[1], Heung-Sik Park[2], Moonkoo Kim[3], Won Joon Shim[3], and Kwang-Sik Choi[1*]

[1]School of Marine Biomedical Science (BK21 PLUS), Jeju National University, 102 Jejudaehakno, 690-756 JejusiJejudo, Republic of Korea

[2]Pacific Ocean Research Center, Korea Institute of Ocean Science and Technology(KIOST), Ansan 426-744, Republic of Korea

[3]Oil and POPs Research Group, South Sea Institute of Korea Institute of Ocean Science and Technology (KIOST), Geoje 656-834, Republic of Korea

Two years after the *Hebei Spirit* oil spill, off the West coast of Korea, mussels *Mytilus galloprovincialis*were collected from two impacted sites and one control area, both in summer (June 2009) and in winter (January 2010). Potential sub-lethal long-term effects of the oil spill were investigated. Tissue content in polycyclic aromatic hydrocarbons (PAHs), internal cellular defense (hemocytes), digestive gland atrophy, energetic reserves and reproductive status were analysed. PAHs in tissues of mussels were not different between impacted and control sites. Hemocyte parameters displayed a seasonal pattern but no trend was related to the oil spill. Digestive gland atrophy was different among sites and seasons but did not appear related to the oil spill. Energetic reserves (glycogen content) remained low in both polluted sites, whatever the season. Contrastingly, glycogen concentration was higher in control site and highly increased in summer, certainly in link with reproductive investment. At last, distribution of reproductive stages was different among sites. Development of gonads appeared delayed and even non-existent in some mussels from the most impacted site. In the second impacted site, gonadic development and spawning seemed erratic compared with control site. Although a direct link with the *Hebei Spirit* oil spill is difficult to establish, mussels from impacted sites obviously present altered energetic and reproductive metabolisms compared with control sites. Further investigations are thus warranted to monitor the long-term evolution of mussel populations on the oil spilled West coast of Korea.

OP-48

Anesthetic effects and physiological responses of clove oil, lidocaine-HCl and tricaine methanesulphonate on Korean seawater shellfishes

Soo Yeon Im[1,*], Hyun Woo Gil[2], In Bon Goo[3], Sang Gu Lim[3], Hyung Gyeon Han[3], Hee Jeong Kong[4], Bong Seok Kim[4], Cheol Min Ahn[4], In-Seok Park[2]

[1]Mechanical and Environment Research Division, Korea Marine Equipment Research Institute, Busan 618-270, Korea

[2]Division of Marine Environment and Bioscience, College of Ocean Science and Technology, Korea Maritime and Ocean University, Busan 606-791, Korea

[3]Inland Aquaculture Research Center, National Fisheries Research and Development Institute (NFRDI), Jinhae 645-758, Korea

[4]Biotechnology Research Division, NFRDI, Busan 619-705, Korea

The aim of this study was to investigate the effects of clove oil lidocaine-HCl, and tricane methane sulfonate (MS-222) on scallop (*Patinopecten yessoensis*), ark shell (*Scapharca broughtonii*), surf clam (*Pseudocardium sachalinensis*), blue mussel (*Mytilus edulis*), granular ark (*Tegillarca granosa*) and shortneked clam (*Ruditapes philippinarum*), and comparing the anesthetic effect among three anesthetics. Anesthetic times of clove oil, lidocaine-HCl and MS-222 were significantly affected by concentrations of anesthetics, and decreased drastically as the concentrations of anesthetics increased ($P < 0.05$). At each group, as the concentration of anesthetics increased, the anesthetic time decreased ($P < 0.05$). At each concentration of anesthetics, as shell length of six species in this experiment increased, anesthetic time increased as well ($P < 0.05$). Trend of recovery times on clove oil, lidocaine-HCl and MS-222 was similar to that of anesthetic times on three anesthetics. Cortisol concentrations of clove oil, lidocaine-HCl and MS-222 on six seawater shellfish were increased until 6 hours after recovery of anesthesia. Cortisol concentrations of three anesthetics on each shellfish were highest at 6 hours. At 6 hours, cortisol concentrations of MS-222 on each shellfish were higher than those of clove oil and lidocaine-HCl. Especially, cortisol concentration of granular ark at 6 hours was higher than those of the other shellfishes. After 6 hours, cortisol concentrations of three anesthetics were decreased until 48 hours. Glucose concentrations of clove oil, lidocaine-HCl and MS-222 on six seawater shellfish were increased until 12 hours. Glucose concentrations of three anesthetics on each shellfish were highest at 12 hours. At 6 hours, glucose concentrations of MS-222 on each shellfish were higher than those of clove oil and lidocaine-HCl, at same time, Glucose concentration of granular ark was higher than those of the other shellfishes. From 12 hours to 48 hours, glucose concentrations of three anesthetics were decreased. The results from this study will contribute to safe laboratory handlings of six seawater shellfishes, which are required by many research and experiments.

OP-49

Feasibility study of the submerged bag cultures for the Pacific oysters *Crassostrea gigas* on the southern coasts of Korea

Qtae Jo[*1], Jong-Cheol Han[1], Young-Baek Hur[1], Kee-Chae Cho[1], and Seong-Jae Jeong[2]
[1]Southeast Sea Fisheries Research Institute, NFRDI, Korea
[2]Fisheries System Engineering Division, NFRDI

Longline aquaculture system culminates in the hundreds-long Korean aquaculture for oysters, *Crassostrea gigas*, particularly in the southern coastal waters of the peninsula with an annual production around 250,000 tons. The system is highly productive, but not suitable for a production of individual shells for half-shell consumption that promotes a new market opportunity in Korean society. Suggested oyster aquaculture systems for individual shells in Korean waters are bag cultures which are location-specifically operated: “on-bottom” for west coasts and “submerged” for south coasts. In 2013, we first introduced commercial floating oyster cages (OysterGro system) from Canada for a feasibility study of the suggested submerged bag culture for individual shells on the southern coasts of the peninsula. Matters of study concern are shell growth, shape, system stability, and fouling organisms on the cage and bags. The floating cage systems were disassembled and reassembled into a 3-layer system connected in ropes, each carrying 3 oyster bags and located in 3 depths representing 0 (surface), 3m, and 5m, respectively. A total of 8kg of individual oysters sized 3-4cm in shell length were contained in each oyster bag (90x40x10cm; mesh, 16mm) and cultured for 4 months in Goseong Bay where representative longline cultures were installed. The oysters in the floating cage (OysterGro) and longline system were used for a reference. In our pilot study, the growth performances of the bagged oysters were overall superior to those suspended in the longline with ($P<0.05$) or without statistical ways. Here, the results were detailed together with authors’ comments and suggestions.

OP-50

Optimum density for the best growth performance of the Pacific oysters *Crassostrea gigas* in the submerged bags installed in the southern coastal waters of Korea

Jong-Cheol Han*, Qtae Jo, Young-Baek Hur, and Kee-Chae Cho
[1]Southeast Sea Fisheries Research Institute, NFRDI, Korea

Simple separation of the colonized oysters on the longline collectors takes the majority of Korean production for the individual Pacific oysters *Crassostrea gigas*, while lantern cage cultures occupy the minor. Both fail to provide an appropriate means for mass or industrial production for the type of the oyster. Recent demand for individual oysters for half-shell market in mass urges oyster aquaculture industry to introduce a new system for an industrial production of the individual shells. But, the aquaculture technology is quite a behind the longline technology in the southern coastal waters. In our previous study on which the introduction of submerged bag culture was centered, we generated some of preliminary data such as system safety, optimum depth for the bag installation, fouling organisms on the cage and bag, and morphogenesis, useful as a baseline for successful introduction of the aquaculture method. One of the key information in realistic sense is about size-and depth-dependent growth performance of the oysters in the submerged bags. Subsequently, we further studied the density-dependent shell growth in the test bag (90x40x10cm; mesh, 16mm). In our four densities (200, 400, 800, 1200 ind/test bag; oyster size, 35mm on average) that lasted for 5 months, the density 800 ind/bag exhibited better growth performance than any other density both in biometric measurements and condition indices. The retarded growth in lower densities might be attributed to water movement-driven oyster agitation in the more spaceous bags.

Poster Presentation

PP-1 ~ PP-240

PP-1

Preliminary Study of Dancing Nudibranch (*Melibe* sp) Rearing During Winter Season

Aswi A. Rofiqoh[1], Zuliyati Rohmah[1,2],
Seok-Joong Kang [3], and Byeong Dae Choi[1]*
[1]Dept. of Seafood Science and Technology, Gyeongsang National University, Tongyeong 650-160, Korea
[2]Faculty of Biology Universitas Gadjah Mada, Yogyakarta 55281 Indonesia
[3]Dept. of Marine Biology and Aquaculture, Gyeongsang National University, Tongyeong 650-160, Korea
*email: bdchoi@gnu.ac.kr

In this study, specimens were captured in Tongyeong sea area on October. The culture experiment was conducted in Gyeongsang National University, Tongyeong, Korea. The culture system for this experiment was running water culture method by utilizing pumped sea water directly from nearby coastal area. Water supply rate was 0.4 L / min with 10 revolutions / day, initial water temperature was 10±0.5°C and salinity was 32±2 psu. Aquaria systems were keep running for 30 days prior of experiment for building up natural biofilm and stabilized the system. Specimens were acclimatized in one aquarium with water temperature 11±0.5°C for 10 days before experiment and fed with mixture of algae and artemia hatch. An experiment was carried out to investigate optimum water temperature (OWT) for melibe. OWT was observed by divided melibe into 3 aquaria, 15 specimens each. Water temperatures were set at 11±2°C, 13±1°C, and 15±2°C for group A, B, and C respectively. The mortality rate of each aquarium was monitored. On the first day of experiment, the highest mortality rate was found in group C (46.7±0.5%), mortality rate in Group B and A were 13.3±0.1% and 20.0±0.1% respectively. The mortality rates were declined in all groups until finally reached 0% in group A at day 4th and day 5th for group B and . The result showed that abrupt increase of water temperature more than 4°C in time less than 24 hours can cause high mortality on melibe. This shown that melibe can not adapt in fast fashion, the adaptation to water temperature changing need time and must be done gradually. Observations showed that gradual changing of temperature 0.5°C/day more suitable for this specimen.

PP-2

Effect of Dietary Ascidians' Tunic Carotenoids on Growth Performance of Sea-Reared Rainbow Trout (*Oncorhynchus mykiss*)

Zuliyati Rohmah[1,2], Aswi A. Rofiqoh[1], Jin-Soo Kim[1],
Seok-Joong Kang [3], and Byeong Dae Choi[1]*
[1]Dept. of Seafood Science and Technology, Gyeongsang National University, Tongyeong 650-160, Korea
[2]Faculty of Biology Universitas Gadjah Mada, Yogyakarta 55281 Indonesia
[3]Dept. of Marine Biology and Aquaculture, Gyeongsang National University, Tongyeong 650-160, Korea
*email: bdchoi@gnu.ac.kr

In this study, Rainbow trout sea-rearing culture was done in open sea area of Tongyeong Korea. It was started with acclimatization fresh water reared fish stocks into the seawater. This process began with fasted the fish for five days prior of the moving. The stocks were move with live fish transport trucks in 3% water salinity. The water then replaced with higher salinity gradually. Right before fishes transported to the sea cage, a dose of antibiotic (Neocycline™ 20 g/L) was added. The Fishes were divided into 3 groups, 900 fishes/group. For this experiment, 3 types of treatment feed were given to the rainbow trout. All treatments feed were used Aller Silver EX™ as base feed. The treatment groups were A (control, feed formula contain 40 ppm of astaxanthin), B (feed with 40 ppm of astaxanthin were further added with 10 ppm of cataxanthin), and C (feed with 40 ppm of astaxanthin were further added with 10 ppm carotenoids extracted from ascidian tunics). Treatments feed were given twice a day (in the morning and evening) until satiation. Analyses were only done to male fishes, this to avoid data bias due to their spawn cycle. During three month treatments, fishes in all groups showed normal growth and there is no morphometric difference between three treatments. Even though morphometric of the fishes showed no differences between groups, the fish's weight showed different trend. Group B and group C had higher weight gain after 3 month treatment. Daily growth index (DGI) showed the growth performance of fishes in group B and C higher compare to that of A. After 30 days treatment, the DGI of group A, B and C were 1.1, 2.2, 2.3 respectively, and after 90 days, they were 3.2, 3.2, and 3.3 respectively. Group A showed decline inclination of Muscle Index (MI) from 0 month to 3 month, as well as group B. in the other hand, Group C showed increase of MI. These mean that muscle growth in group C was faster compared to group A and B.

PP-3

Effect of Dietary Ascidians' Tunic Carotenoids on Polyunsaturated Fatty Acid (PUFA) Status of Sea-Reared Rainbow Trout (*Oncorhynchus mykiss*)

Zuliyati Rohmah[1,2], Aswi A. Rofiqoh[1], Jin-Soo Kim[1],
Seok-Joong Kang[3], and Byeong Dae Choi[1]*
[1]Dept. of Seafood Science and Technology, Gyeongsang National University, Tongyeong 650-160, Korea
[2]Faculty of Biology Universitas Gadjah Mada, Yogyakarta 55281 Indonesia
[3]Dept. of Marine Biology and Aquaculture, Gyeongsang National University, Tongyeong 650-160, Korea
*email: bdchoi@gnu.ac.kr

Rainbow trout (Oncorhynchus mykiss) is one of commercially important fish. Fish is important resources of Polyunsaturated Fatty Acid (PUFA) such as eicosapentaenoic acid (EPA) and eocosahexaeicosanoic acid (DHA) for human. In this study, Sea-reared rainbow trout was given feed which were enriched with carotenoids. Three thousand of fishes were separated into three groups. Group A as control group were given feed which is contain 40 ppm Astaxanthin in its formula; Group B and C were given feed with 40 ppm Astaxanthin and addition of 10 ppm Canthaxanthin and 10 ppm of carotenoids from Ascidian tunics respectively. The study was carried out in Tongyeong sea area. FA analysis of Sea-reared rainbow trout muscle showed: Among treatment groups, Group B had the highest (23.76%) saturated FA, while group C had the lowest (20.37%). Monounsaturated FA (MUFA) contents were increasing over treatment time for all groups. PUFAs concentrations were fluctuated for group A and B but it was steady increasing for group C. At the 3rd month, the total MUFA for group A, B, C are 21.24%, 39.06%, 52.50% and the PUFA are 19.79%, 37.18% and 43.96% respectively. This indicates that in group C, process elongation and unsaturation FA were happened in steady rate over months. The DHA, EPA, and arachidonic acid (ARA) concentration (within PUFA concentration) of group C were highest compare to other groups. They were 1.03%, 4.51%, and 43.96% for ARA, EPA, and DHA respectively. While group B and A have 0.17%, 2.84%, 12.07 and 0.93%, 3.13%, 12.77 respectively. This indicated that carotenoids from ascidian tunics had effect increasing PUFA on rainbowtrout muscle especially its ARA, EPA and DHA.

PP-4

Multifunctional Bioactive Peptides from Ark Shell (*Scapharca subcrenata*) by Peptic Hydrolysis

Young-Sook Cho[1], Chang-Bum Ahn[2], and Jae-Young Je[1]*

[1]Department of Marine Bio-Food Sciences, Chonnam National University, Korea

[2]Division of Food and Nutrition, Chonnam National University, Korea

Osteogenesis and anti-obesity bioactive peptides were generated from Ark shell protein by peptic hydrolysis and its effects were evaluated in mouse mesenchymal stem cells (D1 cells) by measureing alkaline phosphatase (ALP), bone morphogenic protein-2 (BMP2), type-1 collagen, and osteocalcin for osteogenesis, and oil red O assay and free glycerol for anti-obesity. Ark shell protein hydrolysates (ASPH) produced by pepsin at E/S ratio of 1:500 with 2 h hydrolysis showed the highest ALP activity (3.25-fold), BMP2 expression (1.76-fold), type-1 collagen (1.87-fold), and osteocalcin (2.76-fold). While ASPH produced by pepsin at E/S ratio of 1:500 with 4 h hydrolysis reduced lipid accumulation level (0.37-fold) and increased free glycerol content (1.27-fold). These peptides could be a source for functional food ingredients for osteogenesis and obesity.

PP-5

Chemical characteristics of Thailand salt-fermented fish sauces

In-Hak Jeong[1]*, Byoung-Mok Kim[2], and Sujinda Sriwattana[3]

[1]Division of Marine Food Science and Technology, Gangneung National University, Korea

[2]Korea Food Research Institute, Korea

[3]Facuty of Agro-Industry, Chiangmai University, Thailand

Traditional fermentation in developing countries is one of the oldest processing method which are used for preserving fish, where it is not only extend the shelf life but also enhanced a unique taste, flavor and nutritional quality of end products. There are an number of fish fermentation products such as fish sauce which are mainly prepared for flavor enhancers and condiments, however there are also fermented fish prepared as a staple food for years in almost every country in Europe, Asia, and especially South East Asia. At this studies, to provide databases utilized on the qualities development of Korean salt-fermented fish sauces, there are investigated the chemical characteristics of 12 types of commercial Thailand salt-fermented fish sauces. Samples were purchased from Chiang-mai local market at Jan 2014 in Thailend. The moisture contents of all products was 51.8~59.5%, TF 1 was the highest with 59.5%. Ash contents was 20.8~27.9%, crude protein contents was 11.4~20.6%, crude lipid was 0.1~0.6%, salinity was 19.1~28.0% and pH was 5.1~5.6. Volatile basic nitrogen contents was 58.1~289.8 mg%. Total nitrogen contents was 1.819~3.568 g/100 mL, TF 5 was the highest. Amino nitrogen contents was 406.0~1750.0 mg%, TF 6 was the highest. AN/TN ratio of TF 6 was the highest with 96.2%, its of TF 5 was 11.4%. The range of lightness was 34.07~53.39, TF 6 was the highest with 53.39. Range of redness was 10.68~28.79, TF 4 was the highest. Range of yellowness was 23.87~51.40, The 4 was the highest. △E value of TF 4 was the highest with 51.40, TF 8 was the lowest with 23.87. Total content of organic acid was 1112.90~7056.60 mg/L, and TF 5 was the highest. Appearance acceptability of TF 5 was the highest with 4.4. The umami flavor was no significant difference in all samples. The umami taste of TF 5 and TF 6 were 2.8, 2.6 respectively, it was a significantly higher among products.

PP-6

Effects of *Styela clava* ethanolic extract on alcohol induced liver injury in Rats

Byoung-Mok Kim[1]*, Ki-Seung Sung[1], YoonSun Hwang[1], Jung-Min Ha[1], In-Hak Jeong[2], Young-Myoung Kim[3], and Dong-Soo Kim[1]

[1]Korea Food Research Institute, Korea

[2]Division of Marine Food Science and Technology, Gangneung National University, Korea

[3]Korea Food Engineer Association, Korea

Liver is the first organ to metabolize all foreign compounds and hence it is susceptible to many different diseases. Alcohol administration is one of the most common causes of chronic liver disease in the world, and it was found that alcohol affects the liver, through not only nutritional disturbances but also its direct toxicity, because its predominant metabolism in the liver is associated with oxidation- reduction changes and oxidative stress. The body's natural defenses against free radicals (e.g. antioxidants) are inhibited by alcohol consumption resulting in the increasing of liver damage. Alcohol remains amajor cause of liver disease worldwide. It is common for patients with alcoholic liver disease(ALD) to share risk factors for simultaneous injury from other liver insults. ALD is one of the leading causes of liver diseases and liver-related death worldwide. We studied the effect of administering *Styela clava* ethanolic extract to rats with experimentally induced liver damage. The final bodyweights of the alcohol-treated rats were significantly lower than those of the control group and treatment group. The levels of AST, ALT and ALP in the serum were significantly higher in rats receiving alcohol group than in the normal group and treatment group. The serum TBARS values of alcohol group was significantly increased compared to control group and treatment group. The mean values of serum SOD, Catalase were not significantly in ethanol group compared to control group. The serum GSH values of treatment group was significantly increased compared to control group and alcohol group. Regarding the present study it could be concluded that *Styela clava* ethanolic extract possessed both prophylactic and therapeutic effects against experimentally induced liver injury in rats. However, the prophylactic role of these extracts was more potent than their treatment capacity.

PP-7

Changes in quality of fried rice with crab meat depending on the storage period and temperature

Ji-Hee Jung, Ji-Hoon Lim, Dong-Soo Kim, and Byoung-Mok Kim*
Korea Food Research institute, Korea

The crabs live in the depths of 10~50 m of the west and east sea. The sea near *In-cheon* accounted for about 50% of the fishing quota of Korea. It is the most popular food in Korea and was loved by so many people all over the world, because it tastes smooth and rich texture. The crab products were frozen crab meat and crab preserved in soy sauce. Japan has a variety of products to be added with red snow crab meat. However, Korea has developed products suitable consumer acceptability insufficient. In this study, as part of development of high value-added products using the crab, investigated the quality properties of fried rice added crab enzymatic hydrolysate during storage. The pH and acidity values did not show any significantly differences at -20°C. The acidity was initially 0.4%, but rapidly increased to 2.7, 4.6% during storage at 4 and 25°C, respectively. VBN values were significantly increased depend on storage periods in storage at 4 and 25°C. TBA values were initially 1.07 μg MDA/g, but rapidly increased to 1.39 μg MDA/g at storage at -20°C. Microbiological contamination levels did not show any significantly differences during storage at -20°C, but rapidly increase during storage at 4, 25°C for 1 week since gradual increase. The sensory acceptability were did not show any significant differences at -20°C. The sensory acceptability were initially 7.5, and rapidly decreased to 1.0 at 25°C after 6 weeks. The estimated shelf- life predicted that food and drug administration program. The estimated shelf- life fried rice by the sensory acceptability was 3.5 months at -20°C, but the estimated shelf- life fried rice by pH 3.2 months at -20°C.

PP-8

Changes in quality of fried rice with red snow crab meat depending on the storage period and temperature

Ji-Hee Jung, Ji-Hoon Lim, Dong-Soo Kim, Byoung-Mok Kim*
Korea Food Research institute, Korea

Red snow crab is a major fisheries resources in the east coast, especially in *Sock-cho*. The red snow crabs live in the depths of 200~2,000 m. The crab products were frozen crab meat and crab preserved in soy sauce. It has a variety of products to be added with red snow crab meat in Japan, but it has developed products suitable consumer acceptability insufficient in Korea. In this study, as part of the development of high value-added products using the red snow crab, investigated the quality change of fried rice added crab enzymatic hydrolysates during the storage. The pH and acidity values did not show any significantly differences during storage at -20°C, but showed gradual decrease and total acidity showed gradual increase during storage at 4 and 25°C. The VBN and TBA values significantly increased during storage at 4 and 25°C, but there not increased during storage at -20°C. Microbiological contamination levels did not show any significantly differences during storage at -20°C, but rapidly increased during storage at 4 and 25°C. The sensory acceptability rapidly decreased during storage at 4 and 25°C, but there was no change during storage at -20°C. The estimated shelf- life was confirmed by food and drug administration program. The estimated shelf-life of fried rice by the sensory acceptability was 3.56 months at -20°C, but the estimated shelf-life of fried rice by acidity 2.11 months at -20°C.

PP-9

Quality changes in red snow crab sauce fermented during storage at 18℃

Ji-Hoon Lim[1], Jee-Hee Jeong[1], Dong-Soo Kim[1], Young-Myoung Kim[2], and Byoung-Mok Kim[1*]

[1]Korea Food Research Institute, Korea

[2]Korea Food Engineer Association, Korea

Fish sauce is Korean traditional seasoning that manufactured from seafood fermentation. Fish sauce has unique fish and shellfish flavor fermented by microorganisms. But when fermenting the fish sauce, it is unsuitable aspect in industrial and nutritional because of take long fermenting period (at least over 1 year) and high salt content (about 20~30%). If decreasing the addition amount of salt, it could be spoil before fermentation. For this reason, it is need to develop the fish sauce method for low salt, quick fermenting. Therefore, to decrease the fermentation period, 4 treatments and control were applied in this study including red snow crab fermented sauces depending on the general fermented (C, adding only salt on raw material), the autolysis(A), the boiling(B), the enzyme hydrolysates(E) on raw materials and the fermenting with koji(K) during storage at 18°C. And salt concentration of all treatments and control were adjusted 15% lower than its of existing fish sauce. In the flavor of sensory attribute, K samples scored the highest among the treatments in all properties. The VBN values of all treatments were increased with storage period, and K samples showed the lowest values among the treatments in all storage period. The initial total plate count (TPC) of C, A, E and K samples were 3.30, 4.57, 4.43 and 5.26 log CFU/g detected, repectively. The TPC of B samples has none detected until two months. The TPC of K samples were increased until 3 months, and then was decreased from 4 months, and were 5.24 log CFU/g in the end of storage period. The lactic acid bacteria counts (LAB) of K samples were 4.80 log CFU/g in initial time, but continuouly increased until 5 months, and decreased in 6 months. Total nitrogen contents (TN) of C, A, B, E and K samples were 566.7, 636.7, 403.3, 740.0 and 493.3 mg% in initial time, respectively. The TN contents of E samples were highest among the treatments until 2 months, but after 3 month, its of K samples were highest until the end of storage period.

PP-10

Processing optimization of boiling, autolysis and enzyme hydrolysis for red snow crab extract using response surface methodology

Ji-Hoon Lim[1], Jee-Hee Jeong[1], Dong-Soo Kim[1], Young-Myoung Kim[2], and Byoung-Mok Kim[1]*

[1]Korea Food Research Institute, Korea

[2]Korea Food Engineer Association, Korea

Red snow crab is crustacean inhabit in east sea and it has more yield than snow crab. Furthermore, a closed time of red snow crab is shorter than any other seafood. Red snow crab thus, cheaper and easier to contact than snow crab. But the processed food as the raw material by red snow crab is not much. Therefore in this study, as part of developing the processed seasoning using red snow crab, it was investigated the processing optimization of boiling, autolysis and enzyme hydrolysis for red snow crab extract using response surface methodology. TN, AN, VBN and GL contents of autolysis treatments were 430~590 mg%, 221.5~373.0 mg%, 61.6~120.4 and 20.0~51.5 mg%, respectively. The treatments which treated 50°C, 3hrs showed highest contents in all experiments. TN, AN, and GL contents of boiling treatments were 210~480 mg%, 52.5~218.6 mg% and 22.8~45.5 mg%, respectively. The treatments which treated added water of 100%, 3hrs showed highest contents in all experiments. TN, AN and GL contents of enzyme hydrolysis treatments were 540~670 mg%, 373.0~536.2 mg% and 41.9~162.4 mg%, respectively. TN, AN and GL contents increased with increasing adding ratio of alcalase and flavourzyme and hydrolyze time. As a result of response optimization, optimum conditions were 50°C, 3hrs (autolysis), adding 100% of water and 2.38hrs (boiling), adding 0.9% of alcalase and 1.0% of flavouzyme, 24hrs (enzyme hydrolysis).

PP-11

TRIF-dependent signaling pathway is involved in the anti-inflammatory effects of extracts from *Cordyceps militaris* mycelia fermented *Haliotis discus hannai* in RAW264.7 macrophages

Yon-Suk Kim[1], Jin-Woo Hwang[1], Gaurav Lodhi[1], Seong-Eun Kim[1], Young-Ki Han[1], Seo-Hee Kang[1]and Pyo-Jam Park[1]

[1]Department of Biotechnology, Konkuk University, Chungju, 380-701, Korea

This study involves the fermentation of *Haliotis discus* hannai (*H. discus hannai*) with *Cordyceps militaris* (*C. militaris*) mycelia using a solid culture to determine the optimal condition for fermentation with regards to anti-inflammatory effects.

The fermented *H. discus hannai* extracts (HFCM-5) exhibited higher nitric oxide inhibition as compared to *H. discus hannai* and *C. militaris* used individually. HFCM-5 in a dose-dependent manner, also inhibited the release of pro-inflammatory cytokines, TNF-α and IL-6. Although HFCM-5 did not affect MyD88-dependent pathway, it decreased phosphorylation of IRF3 and STAT1 which are involved in TRIF-dependent pathway. Therefore, our results clearly suggest that HFCM-5 possess anti-inflammatory effects which are mediated through TRIF signaling pathway and could potentially be used as a functional food in regulation of inflammation.

PP-12

In vitro and *in vivo* anticancer effects of extracts from *Cordyceps militaris* fermented *Haliotis discus hannai* on skin cancer

Jin-Woo Hwang[1], Yon-Suk Kim[1], Gaurav Lodhi[1], Seong-Eun Kim[1], Young-Ki Han[1], Seo-Hee Kang[1]and Pyo-Jam Park[1]

[1]Department of Biotechnology, Konkuk University, Chungju, 380-701, Korea

The objective of this study was to investigate the anticancer effects of *Cordyceps militaris* (*C. militaris*) mycelia fermented *Haliotis discus hannai (H. discus hannai)* extracts alone, or in combination with doxorubicin.

The extracts from fermented *H. discus hannai* (HFCM) exhibited higher antiproliferative effects than *H. discus hannai* and *C. militaris* on B16F10 cells tested alone. HFCM and doxorubicin when given in combination caused significant decrease in cell viability of B16F10 cells and regulated the cell cycle *in vitro*. The combination of HFCM and doxorubicin also exhibited cancer cell death by increasing Annexin V positive cells and propidium iodide (PI) positive cells. Co-administraion of HFCM at various concentrations with doxorubicin increased its anticancer activity both *in vivo* and *in vitro* thereby highlighting the fact that HFCM acted in synergy with doxorubicin to augment cancer cell death. These results suggest that the combined therapy with HFCM and doxorubicin may be a new promising strategy to in clinical chemotherapy, however further studies are needed for verification.

PP-13

Extracts from *Undaria pinnatifida* fermented with *Ganoderma lucidum* mycelia exhibits anti-oxidant activities

Yon-Suk Kim[1], Jin-Woo Hwang[1], Gaurav Lodhi[1], Seong-Eun Kim[1], Young-Ki Han[1], Seo-Hee Kang[1]and Pyo-Jam Park[1]

[1]Department of Biotechnology, Konkuk University, Chungju, 380-701, Korea

Undaria pinnatifida (*U. pinnatifida*), a sea vegetable is a edible seaweed. In Korea, *U. pinnatifida* soup is popularly consumed by women after giving birth as it is rich in calcium, iodine and nutrients that are important for new nursing mothers. In Oriental medicine it has been used for blood purification, intestinal strength, skin, hair, reproductive organs and menstrual regularity.

In this study, *U. pinnatifida* was fermented with *Ganoderma lucidum* (*G. lucidum*) mycelia in solid culture. The free radical scavenging effects of the extracts from fermented *U. pinnatifida* (FUGM) were evaluated by electron spin resonance (ESR). The antioxidant potential of the extracts of FUGM were also evaluated by FRAP (ferric reducing antioxidant power) and ABTS (2, 2'-azinobis-(3-ethybenzothiazoline-6-sulfonic acid)) assay. The free radical scavenging activity and the antioxidative effects of FUGM extracts were higher than *U. pinnatifida* or *G. lucidum* mycelia tested alone. These results indicate that FUGM extracts have different chemical ingredients from *U. pinnatifida* thereby resulting in a better anti-oxidant activity. The FUGM extracts could be used commercially as an antioxidant in the food industry.

PP-14

Fermentation with *Ganoderma lucidum* mycelia enhances the antioxidant effects of *Enteromorpha*

Young-Ki Han[1], Yon-Suk Kim[1], Jin-Woo Hwang[1], Gaurav Lodhi[1], Seong-Eun Kim[1], Seo-Hee Kang[1] and Pyo-Jam Park[1]

[1]Department of Biotechnology, Konkuk University, Chungju, 380-701, Korea

The purpose of this study was to compare the antioxidant capacities of *Enteromorpha* fermented with *Ganoderma lucidum* (EG) mycelia based on the ratio of included rice bran (0%, 3%, 6%, 9%).

The extracts from EG-6% showed highest growth activity and highest extraction yields. Free radical scavenging activity of EG (0%, 3%, 6%, 9%) was evaluated using electron spin resonance (ESR) spectrometer and EG-6% exhibited the strongest free radical scavenging effects, which was evidenced by the scavenging of DPPH (1,1-diphenyl-2-picrylhydrazyl), hydroxyl (˙OH) and peroxyl (ROO˙) radicals. EG extracts were also investigated for their antioxidant properties using ABTS (2,2′-azinobis(3-ethylbenzthiazoline-6-sulfonate)) and FRAP (ferric reducing antioxidant power) assays. It was found that EG-6% exhibited highest antioxidant capacities in most of the methods used, and thus could act as potential source of natural antioxidants.

PP-15

Antifungal Activity of Seaweed Extracts against Human Harmful Yeasts

Hyo-Jung Kim, Sung-Hwan Eom, and Young-Mog Kim
Department of Food Science and Technology, Pukyong National University, Busan, 608-737, Korea

Currently there is an increase of infection with human harmful yeasts such as *Candida albicans, C. glabrata, C. tropicalis, Malassezia furfur, M. globosa, M. pachydermatis*, and so on. Among them, *C. albicans* is a well-known yeast pathogen causing candidiasis. *Malassezia* spp. have been considered to induce excess production of flakes on the epidermal skin layer, especially on the head, where we refer to the condition as dandruff. Among *Malassezia* spp., *M. globosa* breaks down natural oily secretion (sebum) from the skin and then irritates the surface of the scalp causing inflammation and flaking of the affected epidermal cell layer. Despite *Candida* and *Malassezia* strains affect human in the different way, both are generally present in healthy adult skin and occurring disease when the immune system of hosts become weak or compromised. Although some drugs including steroids, anti-inflammatory agent, and antibiotic are used to cure those infections, several side effects have been reported in clinical results. For that reason, it is necessary to investigate some natural marine resources that exhibit considerable antifungal effect against *Candida* spp. and *Malassezia* spp..

In this study, we reported an antifungal activity of marine algal extracts against those of human harmful yeasts. The antifungal experiments were carried out by disc diffusion assay and minimum inhibitory concentrations. The most effective alga extract was taken to fractionate by *n*-hexane, dichloromethane, ethyl acetate, *n*-butanol, and water for proceeding further study. The results obtained in this study will be useful to provide valuable information on developing a beneficial source for preventing and treating human harmful yeast infections.

PP-16

Antimicrobial-Resistance Profiles and Virulence Genes of *Vibrio parahaemolyticus* Isolated from Seawater in Wando Area

Tae-Ok Kim[1], In-Seon Eum[1], Sang-Man Jo[2], Jung-Kil Seo[1], Na-Young Lee[1], Seung-Yong Lim[1], Yong-Tae Kim[1], Jae-Geun Koo and Kwon-Sam Park[1]*

[1]Department of Food Science and Biotechnology, Kunsan National University, Korea

[2]Department of Marine Life and Aquaculture, Kunsan National University, Korea

Vibrio parahaemolyticus, one of the human pathogenic vibrios, is a Gram-negative halophilic bacterium that naturally inhabits marine and estuarine environments. This bacterium causes food-borne poisoning with the consumption of raw or undercooked seafood, and causes 3 major types of clinical illness: gastroenteritis (the most common illness), wound infections, and septicemia.

In total, 67 *Vibrio parahaemolyticus* isolates from surface seawater of the Wando area, the southern coast of Korea, were analyzed for their susceptibility to 15 different antimicrobials and virulence genes presence. According to the disk diffusion susceptibility test, all of the strains studied were resistance to ampicillin and oxacillin, followed by that to vancomycin (64.2%), streptomycin (56.7%), amikacin (31.3%), kanamycin (22.3%), cephalothin (20.9%), erythromycin (10.4%), ciprofloxacin (4.5%), and tetracycline (3.0%), but all of the strains were susceptible to 5 other antimicrobials such as chloramphenicol, gentamycin, nalidixic acid, sulfamethoxazole/trimethoprim, and trimethoprim. In total, 59 isolates (88.1%) were resistant to three or more classes of antimicrobials and defined as multidrug resistant, and two strains exhibited resistance to 7 antimicrobial agents. The minimum inhibitory concentration (MIC) of 67 *V. parahaemolyticus* to ampicillin and oxacillin were a 512-2,048 and 64-512 μg/mL. All 67 isolates were also examined for the presence of two virulence genes (*tdh* and *trh*) using PCR. However, no isolates presence to *tdh* and *trh* gene. The VPA0477 (β-lactamase) gene, present in all of tested strains, was validated as a new specific marker gene in PCR assays for accurate detection and identification of *V. parahaemolyticus*.

PP-17

Elucidation of Antibacterial Mechanism of Chitosan Conjugates against Methicillin-resistant *Staphylococcus aureus*

Shin-Kook Kang[1]*, Sung-Hwan Eom[1], Jae Young Je[2] and Young-Mog Kim[1]

[1]Department of Food Science and Technology, Pukyong National University

[2]Department of Marine Bio-Food Sciences, Chonnam National University

Many antibiotic-resistant strains are becoming a growing concern in the medical field, and they have been well known throughout the world as a serious problem. In recent years, the prevalence of antibiotics resistance in *Staphylcoccus aureus* has gradually developed into methicillin-resistant *S. aureus* (MRSA). Besides, MRSA has also evolved into acquired vancomycin resistant (vancomycin-intermediate and –resistant *S. aureus*) due to increasing use of vancomycin to treat MRSA-related infections. Following the continuous demand for new solutions to develop an effective and safe treatment for MRSA, we investigated the anti-MRSA activity of chitosan conjugates against MRSA. In this study, chitosan conjugates exhibited significant inhibition on the mRNA expression of *mec* regulator genes (*mecA*, *mecI*, and *mecR1*) related in β-lactam antibiotics resistance. Thus, the results obtained in this study supported the idea that the chitosan conjugates will disturb the production of penicillin binding protein 2a (PBP2a), a key protein of methicillin resistance, encoded by *mecA* through the inhibition of mRNA expression of the *mec* regulator genes.

PP-18

Antioxidant Activity and Lipid Peroxidation Inhibition Effect in Mackerel Model System of Abalone Viscera Hydrolysates

Soo Yeon Park[1], Joung-Youl Hwang[2], Jae-Young Je[1], Chang-Bum Ahn[1]

[1]School of Food Technology and Nutrition, Chonnam National University, Yeosu 550-749, Korea

[2]Korea Abalone Laboratory, Naju 520-330, Korea

Abalone viscera, which are normally discarded as byproducts, was hydrolyzed by proteolytic enzymes, and abalone viscera hydrolysates by alcalase at enzyme/substrate (E/S) ratio of 1:100 showed the highest oxygen radical absorbance capacity (ORAC), and possessed effective antioxidant activities, including hydrogen peroxide scavenging (98.7% at 2.4 mg/mL), ferrous ion chelating (88.0% at 2 mg/mL) activities, reducing power ($abs_{700\ nm}$ 0.97 at 2 mg/mL), and protection ability against hydroxyl radical-induced DNA damage (68.3% at 0.6 mg/mL). To evaluate lipid peroxidation, food model system was developed by mixing of mackerel lipid (2.5% in ethanol) and abalone viscera hydrolysates in phosphate buffer (50 mM, pH 7.0). The mixture was incubated in the dark at 40°C for 4 days followed by measure of malondialdehyde (MDA) in the mixture. After 4 days, MDA without abalone viscera hydrolysates observed 71.33 μM, whereas the value of MDA with abalone viscera hydrolysates was significantly ($P < 0.05$) decreased to 9 μM at 1.0 mg/mL. These results suggest that abalone viscera hydrolysates is a good source of natural antioxidants and could prolong shelf-life of foods.

PP-19

Antioxidant Activity of Sea Mustard (*Undaria pinnatifida*) Hydrolysates and Their Effect on Lipid Peroxidation in Mackerel Model System

Soo Yeon Park[1], Dong-Gi Choi[2], Jae-Young Je[1], Chang-Bum Ahn[1]

[a]School of Food Technology and Nutrition, Chonnam National University, Yeosu 550-749, Korea

[b]Green Seafood, Yeosu 550-220, Korea

The sea mustard hydrolysates were prepared by enzymatic hydrolysis using four proteases (Alcalase, Flavourzyme, Neutrase and Protamex) and seven carbohydrases (AMG, Celluclast, Dextrozyme, Maltogenase, Promozyme, Termamyl and Viscozyme). An array of antioxidant assays, the Alcalase hydrolysates showed higher antioxidant activities than other enzyme hydrolysates. To evaluate lipid peroxidation using mackerel model system, 2.5% mackerel lipid dissolved in ethanol, Alclase hydrolsates, and 50 mM sodium phosphate buffer (pH 7.0) were mixed. The mixture was incubated in the dark at 40°C for 4 days followed by measure of malondialdehyde (MDA) in the mixture. After incubation, the addition of Alcalase hydrolysates decreased MDA formation significantly ($P < 0.05$). With 0.5 and 1.0 mg/mL of Alcalase hydrolysates, inhibitions were 48.4% and 79.5%, respectively. Therefore, the sea mustard hydrolysates by Alcalase may be useful for shelf-life extension of foods.

PP-20

Effect of eco-friendly squid liver oil on the plasma lipids and adipose tissue weight of rats

Soo-Kyung Moon, Soo-Jung Lee, Nak-Ju Sung and Bo-Young Jeong
Department of Food and Nutrition/Institute of Agriculture and Life Science,
Gyeongsang National University, Korea

Common squid liver contains a large amount of n-3 fatty acids (approximately 37% of total fatty acids) such as docosahexaenoic acid (DHA) and eicosapentaenoic acid (EPA). Therefore the liver oil was demonstrated as a good source of n-3 fatty acid. Nevertheless, squid liver oil seems to be little used as a source of n-3 PUFA for human supplement. Moreover, most of common squid liver was discarded or only a little used as a source of dietary fish oil in aquaculture industry. The present study aimed to demonstrate the effect of the squid liver oil on the plasma lipids and adipose tissue weight of rats. Diet of the control (CO) group was prepared according to the recommendation of the American Institute of Nutrition (AIG-93G), using 7% soybean oil as lipid source. The mero (*Dissostichus eleginoides*) oil (MERO) group was substituted for 5% mero oil and 2% soybean oil as lipid source and the eco-friendly squid liver oil (EFSO) group **was** substituted for 5% common squid liver oil and 2% soybean oil. The EFSO was prepared by the method used in the authors' patent and the mero oil was extracted from muscle by a physical method in author's laboratory. The prominent polyunsaturated fatty acids of dietary oils were 18:2n-6 (54.3%) and 18:3n-3 (5.64%) in soybean oil, DHA (6.77%) and EPA (3.61%) in mero oil, and DHA (26.2%) and EPA (9.94%) in common squid liver oil. After feeding for 4 weeks, plasma lipid levels such as triglyceride, total cholesterol, and LDL-cholesterol in rats of the EFSO group were significantly lowered as compared with those of the CO group ($P < 0.05$), and those of the MERO group were apparently lowered, but had no significance as compared with those of the CO group. On the other hand, sum of white adipose tissues (intestinal track, testis and kidney) weight was also significantly lower in the EFSO and MERO groups than the CO group.

PP-21

Effects of eco-friendly squid liver and grape seed oils on the plasma lipids and adipose tissue weight of rats fed high cholesterol

Soo-Kyung Moon, Soo-Jung Lee, Sung-Hee Kim, In-Soo Kim, Nak-Ju Sung and Bo-Young Jeong
Department of Food and Nutrition/Institute of Agriculture and Life Science,
Gyeongsang National University, Korea

Common squid liver is rich in n-3 polyunsaturated fatty acids (PUFA) such as docosahexaenoic acid (DHA) and eicosapentaenoic acid (EPA), approximately 37% of total fatty acids. Therefore squid liver oil was demonstrated as a good source of n-3 fatty acid. However most of common squid liver was discarded. Grape seed oil is rich in n-6 PUFA, 18:2n-6 (approximately 64%) and widely used as cooking oil. The present study aimed to evaluate the effects of the squid liver and grape seed oils on the plasma lipids and adipose tissue weight of rats fed high cholesterol. Diet of the control (CO) group was prepared according to the recommendation of the American Institute of Nutrition (AIG-93G), using 7% soybean oil as lipid source. The high cholesterol (HC) group was added 1% cholesterol to the CO group. The eco-friendly squid liver oil (EFSO) group was substituted for 7% common squid liver oil and 1% cholesterol. The grape seed oil (GO) group was substituted for 7% grape seed oil and 1% cholesterol. The EFSO was prepared by the method used in the authors' patent and the grape seed oil was purchased from a market. After feeding for 4 weeks, the plasma levels of triglyceride, total cholesterol, LDL-cholesterol and VLDL-cholesterol in the EFSO group were significantly lower than those of the HC group ($P < 0.05$). On the other hand, total cholesterol and LDL-cholesterol levels showed no significant differences between the GO and HC groups, while triglyceride, VLDL- cholesterol and HDL-cholesterol levels were similar to those of the EFSO group. Atherogenic index (AI) and cardiac risk factor (CRF) of the EFSO and GO groups were lowered by half levels of HC group. The total weight of white adipose tissues (intestinal track, testis and kidney) and brown adipose tissue were not significantly different among the three groups.

PP-22

Combination effects of eco-friendly squid liver and grape seed oils on the plasma lipids and adipose tissue weight of rats fed high cholesterol

Soo-Kyung Moon, Soo-Jung Lee, Sung-Hee Kim, In-Soo Kim, Nak-Ju Sung and Bo-Young Jeong
Department of Food and Nutrition/Institute of Agriculture and Life Science,
Gyeongsang National University, Korea

The present study aimed to evaluate the combination effects of common squid liver and grape seed oils on the plasma lipids and adipose tissue weight in the rats. Common squid liver is rich in n-3 polyunsaturated fatty acids (PUFA) such as docosahexaenoic acid (DHA) and eicosapentaenoic acid (EPA), approximately 37% of total fatty acids. On the contrary, grape seed oil rich in n-6 PUFA, 18:2n-6 (approximately 64%) is widely used as cooking oil. Diet of the control (CO) group was prepared according to the recommendation of the American Institute of Nutrition (AIG-93G), using 7% soybean oil as lipid source. The high cholesterol (HC) group was added 1% of cholesterol to the diet of CO group. The combination groups with the eco-friendly squid liver oil (EFSO) and the grape seed oil were mixed to be 1/1 (SG-1 group) or 1/8 (SG-8 group) of n-3/n-6 PUFA ratio with both oils and also added 1% cholesterol to both groups. The EFSO was prepared by the method used in the authors' patent and the grape seed oil was purchased from a market. After feeding for 4 weeks, the levels of plasma lipids such as triglyceride, total cholesterol, LDL-cholesterol and VLDL-cholesterol in the SG-1 and SG-8 groups were significantly lower than those of the HC group ($P < 0.05$), while both combination groups showed slightly higher level of HDL-cholesterol compared to that of the HC group. Atherogenic index (AI) and cardiac risk factor (CRF) of both combination groups were as low as 50% of the HC group. The both combination groups showed half levels of aspartic acid transaminase (AST) and alanine transaminase (ALT) activities compared to those of the HC group. On the other hand, the total weight of white adipose tissues (intestinal track, testis and kidney) and brown adipose tissue had no significant difference among the all experimental groups.

PP-23

Antibacterial and synergistic effect of edible seaweed against *Enterococcus* species

Seung-Yong Kim[1], Sung-Hwan Eom[1], Myung-Suk Lee[2], Young-Mog Kim[1]

[1]Department of Food Science and Technology, Pukyong National University, Korea

[2]Department of Microbiology, Pukyong National University, Korea

With the continuing demand for new solutions in the development of effective and safe candidiasis therapies, an investigation was carried out to test the efficacy of an antibacterial agent from marine edible seaweed . The methanolic extract of marine edible seaweed evinced potential antibacterial activity against *Enterococcus* species. The ethyl acetate (EtOAc)-soluble extract from marine brown algae demonstrated the strongest antibacterial activity against *Enterococcus* species among five solvent-soluble extracts. In fact, the EtOAc-soluble extract evidenced the highest antibacterial activity against *Enterococcus* species with an minimum inhibitory concentration (MIC). Furthermore, the EtOAc-soluble extract considerably reversed the high-level antibiotic resistance of *Enterococcus* species. The MIC values of antibiotic against *Enterococcus* species were substancially reduced with MIC of EtOAc-soluble extract, thereby indicating that the EtOAc-soluble extract and antibiotic combinations exert a marked synergistic effect against *Enterococcus* isolates. The findings from the present research imply that the compounds derived from marine brown algae can be a potential source of natural antibacterial agents and a pharmaceutical component against *Enterococcus* species.

PP-24

Bioactive peptides from *Porphyra yezoensis* and their anti-inflammatory activities

Hyun-Ah Lee*, In-Hye Kim, Jungim Lee, Eun-Young Kim, Youn-Hee Choi, and Taek-Jeong Nam
Institute of Fisheries Science, Pukyong National University, Korea

Porphyra yezoensis is an important marine algae and its high protein content can act as an excellent source of biologically active peptides. Potent inhibitory effects on the production of inflammatory mediators were observed in bioactive peptide derived from *P. yezoensis*, as demonstrated by the inhibition of lipopolysaccharide (LPS) induced nitric oxide (NO) production in macrophages. This study showed that different concentrations of peptide ranging from 250 to 1,000 ng/mL were applied to the RAW 264.7 cells for 24 h, and no significant cytotoxicity was found through cell viability assay. We examined that the peptide from *P. yezoensis* completely inhibited LPS-stimulated NO release in a dose-dependent manner. It was also investigated that the fluorescence intensity corresponding to intracellular reactive oxygen species (ROS) produced by 10 ng/mL LPS-stimulated cells significantly shifted, indicating that peptide reduced the level of ROS. Furthermore, peptide exerts the potent inhibitory activity to decrease the release of pro-inflammatory cytokines (iNOS, COX-2, and TNF-α) in LPS-stimulated macrophages in dose-dependent manner. This result suggests that suppression of these mediators may be an effective strategy for preventing inflammatory reactions. We conclude that peptide from *P. yezoensis* can play a significant role as anti-inflammatory agents, with great potential for the use of marine products in future.

PP-25

Peptides from *Porphyra yezoensis* regulates proliferation in AGS cell

In-Hye Kim*, Hyun-Ah Lee, Jungim Lee, Eun-Young Kim, Youn-Hee Choi, and Taek-Jeong Nam
Institute of Fisheries Science, Pukyong National University, Korea

Porphyra yezoensis is red alga that is mainly consumed in Korea, China and Japan. It is an important source of physiologically active substance such as sulfated polysaccharide, polyphenols and peptide with biological effect including anti-tumor, anti-inflammatory and anti-oxidant.

In this study, we examined the anti-tumor effect in AGS gastric cancer cell by a peptide from *P. yezoensis* (PY-PE10). To verify the effects of PY-PE10 on cell viability, cells were treated with PY-PE10 at concentrations between 125 to 500 ng/mL and no significant difference.

To determine whether PY-PE10 was caused by apoptosis, Annexin V/7-AAD double-staining was performed. In PY-PE10-treated AGS cells, the percentage of the early apoptotic cells, as well as the total percentage of Annexin V-positive cells indicating late apoptotic cells, was significantly increased in a dose-dependent manner. And then, to determine whether PY-PE10 affected the cell cycles of AGS cells, we performed cell analysis 24 h after PY-PE10 treatment. Treatment with 500 ng/mL PY-PE10 led to a significant decrease in the production of G0/G1 (7.5% in W/O, 77.8% in PY-PE10-treated samples) and S phase arrest (31.1% in W/O, 39.3% in PY-PE10-treated samples). To determine the apoptotic mechanisms through which PY-PE10 interferes with cell cycle progression, we confirmed the cell cycle-related protein content. The levels of Cdk2, Cdk4, Cdk6, and cdc25 increased, whereas the Rb, p16 and p27 level increased. And, Bcl-2, caspase-9, and JNK expression decreased following treatment with PY-PE10, whereas that of Bad, Bax increased.

These results suggest that the anti-proliferative effect of PY-PE10 in AGS cells can be attributed to a blocking of the of G0/G1 and S phase of the cell cycle as well as increasing of the apoptotic cell. These results indicate that PY-PE10 had a strong anti-tumor effect on AGS cell and is a potent apoptosis-inducing agent.

PP-26

Overexpression of BACE1 (β-secretase) in *E. coli*

Yeon-Ji Lee[1]*, Shuaiqi Tai[1], Jung-Kil Seo[1], Seung-Yong Lim[1], Na-Young Lee[1], Kwon-Sam Park[1], Jae-Geun Koo[1], Sun Joo Park[2] and Yong-Tae Kim[1]

[1]Department of Food Science and Biotechnology, Kunsan National University, Korea

[2]Department of Chemistry, Pukyong National University, Korea

BACE1 (β-secretase) is a membrane-associated aspartic protease involved in cleavage of amyloid precursor protein (APP) to generate the amyloid β peptide, the principal component of the plaques found in brains of Alzheimer's disease patients. In the amyloid hypothesis for Alzheimer's disease, accumulation of amyloid β peptide is thought to be responsible for the development of the disease. Since BACE1 processes the APP at a key step in generating the amyloid β peptide, it is regarded as a major target for drug design in Alzheimer's disease. BACE1 was identified as the first member of a new class of transmembrane aspartic protease. The deduced amino acid sequence of BACE1 shows to contained the typical pre, pro, protease, transmembrane, and cytosolic domains. In the present study, we have constructed overexpression vectors for the production of BACE1 protease for determination of the enzymatic properties of BACE1. The gene encoding BACE1 was amplified from a human placenta cDNA library by using polymerase chain reaction method. The amplified fragment was cloned into the BamHI site of pET11a expression vector, resulting in pET11a/BACE1. The primary structure of recombinant BACE1 is consisted sequentially of a T7 tag sequence, a pro, a mature protease domain and C-terminal extension. Recombinant BACE1 protease was successfully overexpressed in *E. coli*, BL21 (DE3) as inclusion body. At the present, we try to refold the inclusion body of the expressed BACE1 protein by the rapid dilution method.

PP-27

Screening of biological activities of jellyfish (*Aurelia aurita*) extracts

Hyo Jin Joo, Min Sung Park, Hye-Jin Go, and Nam Gyu Park
Dept. of Biotechnology, Pukyong National University, Busan 608-737, Korea

A search for antibacterial, hemolytic, antioxidant activity in various tissues of jellyfish *Aurelia aurita* was conducted. Samples were extracted with water containing 1% acetic acid and each extracts were passed through a Sep-Pak C18 cartridge. Each column was washed with water, 60% methanol (RM60) and 100% methanol (RM100). Extracts from several tissues revealed a broad antibacterial activity against both Gram positive (*Bacillus subtilis* KCTC1021, *Micrococcus luteus* KCTC1071 and *Staphylococcus aureus* RM4220) and Gram negative (*Escherichia coli* D31, *Aeromonas hydrophila* KCTC2358, *Salmonella enterica* ATCC13311, *Pseudomonas aeruginosa* KCTC2004, *Shigella sonnei* KCTC2009 and *Edwardsiella tarda* KCTC12267) bacteria by the ultrasensitive radial diffusion assay. Relatively high antibacterial activity was detected in gonad RM100 and oral arm RM100 extracts. Additionally, treatment of the extracts with trypsin for 60 min at 37°C, remarkably decreased antimicrobial activity against *B. subtilis* KCTC1021 (other bacteria were not tested), suggesting that the extract had a proteinaceous nature. All crude extracts showed almost no hemolytic activity. Results from the antioxidant activity assay using DPPH showed that each extracts had antioxidant activity. High antioxidant activity was observed in oral arm RM60 extracts. These results suggest that the jellyfish *A. aurita* is a potential source for the discovery of novel antibacterial and antioxidant compounds and can be further studied.

PP-28

Screening of biological activities of sea anemone (*Urticina crassicornis*) extracts

Ye Jin Lee, Ha Ri Kim, Ji Hee Heo, Hye-Jin Go, and Nam Gyu Park
Dept. of Biotechnology, Pukyong National University, Busan 608-737, Korea

A search for antibacterial, antioxidant, and hemolytic activity in various tissues of the sea anemone *Urticina crassicornis* was conducted. Samples were extracted with water containing 1% acetic acid. Extracts from several tissues tested revealed a broad antibacterial activity against both Gram positive (*Bacillus subtilis* KCTC1021, *Micrococcus luteus* KCTC1071 and *Staphylococcus aureus* RM4220) and Gram negative (*Escherichia coli* D31, *Aeromonas hydrophila* KCTC2358, *Salmonella enterica* ATCC13311, *Pseudomonas aeruginosa* KCTC2004 and *Shigella sonnei* KCTC2009) bacteria by the ultrasensitive radial diffusion assay. Relatively high antibacterial activity was detected in gonad-intestine mixture and internal muscle extracts. Additionally, treatment of the extracts with trypsin for 60 min at 37°C, decreased antimicrobial activity against *B. subtilis* KCTC1021 (other bacteria were not tested), suggesting that the extract contained a proteinaceous nature. Results from the antioxidant activity assay using DPPH showed that each extracts had antioxidant activity. High antioxidant activity was observed in gonad-intestine mixture. On the other hand, all crude extracts showed almost no hemolytic activity. The screening results suggest that the sea anemone *U. crassicornis* is a potential source for the discovery of novel antibacterial and antioxidant compounds and can be further studied.

PP-29

Effect of tuna eyeball oil on the inhibitory of atopic dermatitis

Yeon-Uk Choi[1]*, Bo-Kyeong Kang[1], Si-Woo Bark[1], Won-Min Pak[1], Bo-Ram Kim[1], Na-kyung Ahn[1], Koth-Bong-Woo-Ri Kim[2], Min-Ji Kim[2] and Dong-Hyun Ahn[1]

[1]Department of Food Science and Technology, Pukyong National University, Korea

[2]Institute of Fisheries Sciences, Pukyong National University, Korea

Atopic dermatitis (AD) is a quite complicated skin syndrome influenced by genetic background and different types of environmental factors. This study was carried out to investigate the anti-atopic effects of tuna eyeball oil (TEO). ELISA and skin clinical severity score were performed to determine the anti-atopic effects of TEO. AD was induced in BALB/c mice by spreading 2,4-dinitrochlorobenzene (DNCB) to the dorsal skin. The production of cytokines related to AD such as interleukin-4 (IL-4) and interferon-gamma (IFN-γ) in the splenocytes culture supernatant, and total Immunoglobulin E (Ig E) in the serum were measured by ELISA. The production of IL-4 was decreased compared to the positive control group. On the other hand, the IFN-γ production was significantly increased in TEO-treated groups compared with the positive control group. Total serum IgE levels were also suppressed in TEO-treated groups. In cell viability by TEO, there was no cytotoxicity in the mice splenocytes proliferation treated with TEO compared to the control. Also, When TEO was applied to DNCB-induced mice for 3 weeks, the skin was recovered to normal condition with clean and smooth skin surface. Taken together, these results suggest that TEO may exert an inhibitory effect on atopic dermatitis.

PP-30

Effects of Immersion Liquids with *Citrus junos* and *Prunus mume* Concentrate and High Hydrostatic Pressure on Shelf-life and Quality of *Scomber japonicus* during Refrigerated Storage

Won-Min Pak[1], Bo-Kyeong Kang[1], Si-Woo Bark[1], Bo-Ram Kim[1], Na-Kyung Ahn[1], Yeon-Uk Choi, Koth-Bong-Woo-Ri Kim[2], Min-ji Kim[2] and Dong-Hyun Ahn[1]

[1]Department of Food Science and Technology, Pukyong National University, Korea

[2]Institute of Fisheries Sciences, Pukyong National University, Korea

This study was conducted to examine the effects of combined treatments of immersion liquids (each adjusted to pH 4.5 with *Citrun junos* extract (CL), pH 5.5 with *Prunus mume* extract (PL), no pH adjustment (pH 6.5, control) and high hydrostatic pressure (HHP) treatments on shelf-life and quality of mackerel. In this study, we measured the changes in viable cell counts, pH, VBN, TBARS, texture, color analysis, VOCs, and sensory evaluation of makerel at 4°C for 20 day. CL/HHP and PL/HHP treatments reduced viable cell counts by 3 log cycles during storage compared to the control. The mackerels treated with CL/HHP and PL/HHP treatments showed significantly low TBARS and VBN levels as compared to the control. Additionally, hardness of mackerel was suppressed by applying CL/HHP and PL/HHP treatments. After combined treatments, lightness and whiteness increased, but redness decreased. The results of VOCs tests showed that the contents of alcohol, acid, and ketone compounds in mackerel fillet treated with CL/HHP and PL/HHP were relatively decreased, especially CL/HHP and PL/HHP suppressed the production of sulfurs. In the sensory evaluation, mackerel treated with CL/HHP and PL/HHP showed higher scores than the control. These results suggest that immersion liquids and HHP treatments may increase shelf-life of mackerel and maintain of qualities during storage at 4°C.

PP-31

Effect of *Myagropsis myagroides* ethnaol extracts on the inhibitory activity of atopic dermatitis

Na-Kyung Ahn[1]*, Bo-Kyeong Kang[1], Si-Woo Bark[1], Won-Min Pak[1], Bo-Ram Kim[1], Yeon-Uk Choi[1], Koth-Bong-Woo-Ri Kim[2], Min-Ji Kim[2] and Dong-Hyun Ahn[1]

[1]Department of Food Science and Technology, Pukyong National University, Korea

[2]Institute of Fisheries Sciences, Pukyong National University, Korea

Atopic dermatitis (AD) is a chronic and relapsing inflammatory disease associated with a combination of intense pruritus, scratching, and cutaneous sensitization with allergens. The aim of this study was to evaluate the effects of *Myagropsis myagroides* ethanol extracts (MMEE) on atopic dermatitis. To investigate anti-AD effect of MMEE, the test was carried out by spreading MMEE on the dorsal skin of 2,4-dinitrochlorobenzen (DNCB)-induced BALB/c mice for 3 weeks. The total clinical severity scores indicated that MMEE alleviated symptoms of the erythema in DNCB-induced mice. Moreover, the IFN-γ secretion of the group treated with MMEE was increased in splenocytes from DNCB-induced mice compared to the positive control, while IL-4 secretion diminished. Total IgE levels in sera were significantly reduced by MMEE treatment. There was no cytotoxicity in mice splenocytes proliferation treated with MMEE compared to the control. Through these results, we can conclude that MMEE can inhibit atopic dermatitis without any cytotoxicity. Therefore, MMEE can be applied to atopic disease theraphy.

PP-32

Anti-inflammatory effects of tuna eyeball oil on LPS-induced macrophages and mouse edema

Min-Ji Kim[1]*, Koth-Bong-Woo-Ri Kim[1], Bo-Kyeong Kang[2], Si-Woo Bark[2], Won-Min Pak[2], Bo-Ram Kim[2], Na-Kyung Ahn[2], Yeon-Uk Choi[2], and Dong-Hyun Ahn[2]

[1]Institute of Fisheries Sciences, Pukyong National University, Korea

[2]Department of Food Science and Technology, Pukyong National University, Korea

Inflammation is known to participate in the mediation of a growing number of acute and chronic disorders such as tumor, ulcerative colitis, and pneumonia. In order to avoid these diseases, anti-inflammation materials from natural resources, which have already been proved safe, have been developed and applied to food and medicines. In particular, marine organisms are great sources of structurally diverse bioactive compounds with various biological activities. Therefore, in this study, the anti-inflammatory effects of tuna eyeball oil (TEO) were investigated using LPS-induced inflammatory response. As a result, NO and pro-inflammatory cytokines (IL-6, IL-1β, TNF-α) were inhibited up to 50% with increasing concentrations of TEO without any cytotoxicity. In addition, TEO suppressed the expression of inducible nitric oxide (iNOS), clyclooxygenase 2 (COX-2) and nuclear factor kappa B (NF-κB) in a dose-dependent manner. Moreover, the formation of mice ear edema was reduced at the highest dose tested compared to that in the control and reduction of ear thickness was observed in histological analysis as well. In acute toxicity test, no moralities occurred in mice administered 5000 mg/kg body weight of TEO over two weeks observation period. These results suggested that TEO may have significant effects on inflammatory factors and be potential anti-inflammatory therapeutic materials.

PP-33

Validation of a HPLC analysis for the detection of dieckol in phlorotannin extracts

Jiyoung Kim*, Suengmok Cho
Division of Metabolism and Functionality Research, Korea Food Research Institute,
Sungnam 463-746, Korea

Phlorotannins are one of the most important marine bioactive polyphenols. Among phlorotannin constituents, dieckol is the most abundant, and has been considered to be an indicator compound in phlorotannin extracts from brown seaweeds. For quantitative analysis of dieckol, an indicator compound of phlorotannin products, was carried out using HPLC (Agilent 1200, Agilent, USA) system. Quantification of dieckol was expressed by the particular analysis in the specificity, linearity, accuracy, recovery, and precision, respectively. Dieckol and phlorotannin extracts showed each a good specificity and linearity with correlation coefficients (R^2) over 0.999. The relative standard deviation (R.S.D.) of accuracy was ranged from 1.29 to 2.01% and recovery showed over 98.873%. The dieckol contents (74.453 mg/g) and R.S.D. value (1.236%) were detected in intermediate precision analysis. Inrta-assay precision analysis was ranged for dieckol contents (72.730-77.265 mg/g) with acceptable R.S.D. values (0.434-1.748%). Our results suggest that validation of HPLC analysis could be effectively used to quantify the dieckol in phlorotannin extracts.

PP-34

Acute oral toxicity of a high-purity phlorotannin preparation in beagle dogs

Hyejin Yang[1*] and Suengmok Cho[1]

[1]Division of Strategy and Industry Research, Korea Food Research Institute, Korea

Phlorotannins, the major constituent in brown algae, possess various biological activities; however, little information is available regarding their toxicological effects. For the safety assessment of phlorotannins, we investigated acute oral toxicity of a high-purity phlorotannin preparation (PRT; total phlorotannin content: 90%) in beagle dogs. Six beagle dogs (3 males and 3 females) were distributed randomly in 3 experimental groups. PRT was administered at oral doses of 250, 500 and 750 mg/kg by capsule. Vomiting by male and female beagle dogs was observed at the 500 and 750 mg/kg for first day. Also, there were soft stool and diarrhea for a while in one beagle dog at the 3 and 13 days in the 750 mg/kg administration. But no death or abnormal clinical sign was observed during the experiment period. All groups showed similar body weight gain and food consumption. Our acute toxicity study showed that PRT did not cause any toxicological effects in beagle dogs.

PP-35

Optimization of processing parameters for reducing the total arsenic content of the brown seaweed *Ecklonia cava* using response surface methodology

Minseok Yoon* and Suengmok Cho

Division of Strategic Food Research, Korea Food Research Institute, Korea

The arsenic content has been considered a major safety concern in brown seaweed products. Brown seaweed has a higher concentration of arsenic than green and red seaweeds due to the chelating activity of the phlorotannins. High arsenic content can lead to a significant number of health concerns including hyperkeratosis, jaundice, vascular diseases, and cancer. This study aimed to optimize the processing parameters for reducing the total arsenic content of *Ecklonia cava,* one of the brown seaweeds, using response surface methodology. In the previous study, arsenic content of seaweed was reduced by soaking in a solution containing potassium chloride (KCl). Therefore, KCl concentration (X_1, M), soaking temperature (X_2, °C), and soaking time (X_3, h) were chosen as independent variables. The dependent variables were total phlorotannin content (TPhC; Y_1, mg PGE/g) and total arsenic content (Y_2, mg/kg). Optimal conditions of X_1, X_2, and X_3 were 2M, 36°C, and 0.5 h, respectively, and the predicted values of the multiple response optimal conditions were Y_1 = 124.2 mg PGE/g and Y_2 = 25.4 mg/kg. Under optimal conditions, the experimental values of Y_1 and Y_2 were 119.7±9 mg PGE/g and 24.3±0.8 mg/kg, respectively, which were similar to the predicted values. Among the independent variables, soaking temperature (X_2) was the greatest factor for highest Y_1 and lowest Y_2. This result may provide useful information for development of foods from brown seaweeds.

PP-36

Design of short antimicrobial peptides derived from the American Oyster Defensin (AOD) isolated from the American Oyster, *Crassostrea virginica*

Chang-won Lee[1], Han Ju Yu[1], Seung-Yong Lim[1], Na Young Lee[1], Yong-Tae Kim[1], Kwon-Sam Park[1], Jae-Geun Koo[1], Eun–Woo Lee[2] and Jung-Kil Seo[1]

[1]Department of Food Science and Biotechnology, Kunsan National University, Korea

[2]Department of Life Science and Biotechnology, Dongeui University, Korea

American Oyster defensin (AOD) was purified from the acidified gill extract of the American Oyster, *Crassostrea virginica*. This peptide was composed of 38 amino acids containing 3 disulfide bonds with 4265.0 Da. This peptide showed high sequence homology to arthropod defensin including other bivalves, the mussels, *Mytilus edulis*, and the pacific oyster, *Crassostrea gigas*. This peptide showed strong antimicrobial activity against Gram-positive bacteria (*Lactococcus latis* subsp. *lactis* and *Staphylococcus aureus*) but also had significant activity against Gram-negative bacteria (*Escherichia coli* D31 and *Vibrio parahemolyticus*).

We designed and synthesized 3 analogues (AOD-1~3) predicted the turn structure consisting of 9 amino acids with a disulfide bond derived from the C-terminus of AOD and evaluated their antimicrobial activity against gram-positive, gram-negative bacteria, and *C. albicans*, and hemolytic activity against human red blood cells to develop the lead peptides as antibiotic candidates.

Our experimental results showed 3 analogues exhibited significant antimicrobial activity against all tested bacteria and *C. albicans* without hemolytic activity. Killing kinetic studies indicated that the inhibition mode of analogues on the bacteria is a bacteriostatic process. These results suggest that 3 analogues have broad spectrum antimicrobial activity and no cytotoxicity and can potentially be applied for as an alternative therapeutic agent to conventional antibiotics for the treatment of diseases.

PP-37

Purification of an antimicrobial peptide from sea anemone (*Urticina crassicornis*) extract

Ha Ri Kim, Ji Hee Heo, Ye Jin Lee, Hye-Jin Go, and Nam Gyu Park
Dept. of Biotechnology, Pukyong National University, Busan 608-737, Korea

A search for antimicrobial peptides in the muscle and pharynx mixture of sea anemone, *Urticina crassicornis,* was conducted. The mixture was extracted with water containing 1% acetic acid. The extract was first fractionated through a continuous AU-PAGE (Prep-Cell), then the fractions were tested for antimicrobial activity against *Bacillus subtilis* KCTC1021 through ultrasensitive radial diffusion assay. Active fractions containing smaller compounds were treated with trypsin for 60 min at 37°C. These fractions showed decrease in antimicrobial activity indicating that the fractions' activity was due to proteinaceous nature. Selected fractions were purified through three steps of HPLC (Cap Cell-Pak C18, Vydac C4 214TP5415, and Superdex 10-300 gl column) and an antimicrobial peptide was isolated. Treatment of the purified peptide with dithiothreitol (DTT) for 60 min at 37°C, did not change this peptide's retention time in HPLC indicating that the peptide has no disulfide bond. The mass of this peptide was determined to be 4314.430 Da by MALDI-TOF. The amino acid sequence analysis is in progress.

PP-38

Polymer-associated Particles Formation of Enzymatic Reacted Mackerel Oil by Gas Saturated Solution Process and Measure Active Compound Release at Different Solvent

A. S. M.Tanbirul Haque and Byung-Soo Chun*

Department of Food Science and Technology, Pukyong National University, Busan 608-737, Korea

*bschun@pknu.ac.kr

Fish oil derived from the tissues of oily fish, fish oil is recommended in a healthy diet because it contains the ω-3 fatty acid PUFAs like eicosapentaenoic acid (EPA) and docosahexaenoic acid (DHA). Beneficial health effects of ω-3 PUFA are well demonstrated and include the prevention of a number of diseases such as ω-3 fatty acids are essential for normal growth and development of the brain and the nervous system and also thought to be beneficial in treating coronary artery disease, hypertension, arthritis, clinical depression, anxiety others inflammatory and autoimmune disorders and cancer. Particle design is presently a major development of supercritical fluids applications, mainly in the paint, cosmetic, pharmaceutical, and specialty chemical industries. Supercritical fluids have been successfully used to obtain composites or encapsulates, which comprise an active compound loaded into a matrix of a carrier material, in order to improving product preservation as well as controlling the dissolution rate of the active compound. This study, PGSS will be used to micronized enzyme reacted oil of mackerel by supercritical carbon dioxide (SC-CO2). The particle formation of functional material with biodegradable polymer, PEG (polyethylene glycol) will be used. PGSS will be carried out in different temperatures and pressures to measure the optimum condition for the formation of reacted oil particle. Different nozzle and different ratios of reacted oil and PEG will be used during PGSS process for 1 hr. After particle formation, release of functional compound from particle at different solvent will be assessed.

PP-39

Mono-saccharides Production from Brown Seaweed (*S.japonica*) by Supercritical W ater Hydrolysis

SaravanaP.S[1], Hee-Chul Woo[2] and Byung-SooChun[1*]

[1] Department of Food Science and Technology, Pukyong National University, Busan 608- 737, Korea

[2] Department of Chemical Engineering, Pukyong National University, Busan 608-739, Korea

*bschun@pknu.ac.kr

The extraction of biomass with supercritical water (SCW) solvents has generated considerable interest in the use of these solvents as reaction media. The rough correlation of extract yield with the critical temperature of the solvent' suggests that the ultimate extract yield could be due to both thermodynamics and kinetics. Pyrolysis of these feedstock's could fragment the biomass macromolecules to lower molecular weight species with enhanced solubility's in the SCW. Seaweeds are rich in bioactive compounds which have well-documented antioxidant properties. They also have antimicrobial activities against food pathogenic microorganisms. To date, there have been no reports about supercritical water hydrolysis of seaweed extracts. *S. japonica* has abundant bioactive compounds. So, we used this brown seaweed for supercritical water hydrolysis with different temperature conditions. The extraction will be done with condition 330-420°C bar for the reaction pressure and 1:20 (w/v) for the ratio of material to water Then we analyzed the hydrolysis yield content. The obtained supercritical water extract was evaluated to find out the Total flavonoid content, Total phenolic content and other biological properties like antioxidant, antimicrobial, anti-inflammatory, antihypertensive were estimated. Meanwhile we also determined the Physical properties like Proximate Analysis, Viscosity, pH, Measurement of color and Total organic compound. On the other hand the recovery of the valuable material like bioenergy material are identified by total glucose, reducing sugar, measurement of gulose and mannose by HPLC was done. So, this will be first report on supercritical water hydrolysis of *S.japonica* and analysis of the biological properties and bioenergy products.

PP-40

Quality characteristics of bread produced from wheat and Laver powder

Jung-Hee Yoo[1] and Jae-Geun Koo[2]*

[1]Dept. of Food & Nutrition, Kunsan National University, Korea

[2]Dept. of Food Science & Biotechnology, Kunsan National University, Korea

Porphyara has high concentration of total dietary fiber and protein as functional components. However, no systematic study of the effect of laver-supplemented bread has yet been studied. In the present study, efforts have been made to supplement wheat flour with laver to develop protein-dietary fiber rich functional bread. The sourdough process and frozen dough methods were available for preparing bread with laver paste. Laver paste was able to reduce the loss of moisture content during bread storage and retard staling rate of crumb by enhancing the water holding capacity. When laver paste (at 8% baked laver powder substitution) was substituted, this significantly increased the contents of protein and dietary fiber than those of control. The bread containing 5% porphyran powder obtained excellent baking functionality. This bread containing porphyran would be a highly acceptable product with dietary fiber.

PP-41

Effects of molecular weight of porphyran Isolated from Laver, *Porphyra yezoensis*, on Lipid Metabolism in Rats Fed High Fat Diet

Jae-Geun Koo[1]*, Jung-Sun Lee[2], Myung-Heon Lee[2]
[1]Dept. of Food Science & Biotechnology, Kunsan National University, Korea
[2]Dept. of Food & Nutrition, Hallym College, Korea

This study was carried out in order to investigate hypocholesterolemic effects of porphyran fractions isolated from laver. SD rats were fed diets containing cellulose (control), de-proteined porphyran, high molecular porphyran-1 (MW>100,000), low molecular porphyran-2 (MW<100,000) with 1% added cholesterol for 6 weeks. Among rats fed cholesterol diet, plasma total lipid, total cholesterol, esterified-cholesterol, LDL-cholesterol concentration were significantly lower in group fed de-proteined porphyran compared with control, porphyran-1, porphyran-2. The group fed de-proteined porphyran had significantly higher fecal excretion of TG, total bile acid and total cholesterol than did the other components fed groups when cholesterol diet was fed. The results indicate that de-proteined porphyran which was isolated from laver may exert its hypocholesterolemic effects by increasing excretion of fecal TG, total bile acid and cholesterol.

PP-42

Establishment of optimal mixing condition and preparation of seasoning sauce for sea rainbow trout jerky using response surface methodology (RSM) and Manufacture

Min-Soo Heu[1], Ki Hyun kim[2], Sang In Kang[2], Jun Kyu Lee[2],Yong Jung Kim[2], Sung Hwan Park[1], Hyun Ji Lee[1] and Jin-Soo Kim[2]

[1]Department of Food Science and Nutrition, Gyeongsang National University, Korea

[2]Department of Seafood Science and Technology, Gyeongsang National University, Korea

This study was conducted to optimize mixing condition of seasoning sauce for sea rainbow trout jerky using response surface methodology (RSM) and prepare the seasoning sauce. Three independent variables, salt, sugar and amino acid-based material contents, and three dependent variables, trichloroacetic acid (TCA) soluble nitrogen content, salinity and overall acceptance, were adopted as the central condition of the central composite design (CCD) for optimizing seasoning sauce. According to the results of diagnostic checking of the fitted models and analysis of variance (ANOVA), quadratic polynomial models were suitable for fitting seasoning sauce for sea rainbow trout jerky. According to the results of response surface methodology (RSM), optimal blending ratio of additives as a seasoning sauce of sea rainbow trout jerky were 1.2% for salt, 10.5% for sugar, and 9.8% for amino acid-based material. The TCA-soluble nitrogen content, salinity and overall acceptance of seasoning sauce for sea rainbow trout jerky under optimal condition were 590.9±6.4 mg/100 g, 5.7±0.2 point and 1.8±0.1%, which were similar to predicted values, such as 588.0 mg/100 g for TCA-soluble nitrogen content, 5.51 point for overall acceptance, and 1.8% for salinity.

PP-43

Food Quality Characterization of Seasoning Sauce for Sea Rainbow Trout Jerky

Ki Hyun Kim[1], Sang In Kang[1],Jun Kyu Lee[1],Yong Jung Kim[1],Min-Soo Heu[2] and Jin-Soo Kim[1]
[1]Department of Seafood Science and Technology, Gyeongsang National University, Korea
[2]Department of Food Science and Nutrition, Gyeongsang National University, Korea

This study was conducted to investigate food quality characterization on the 3 kinds, general taste, hot taste and terayaki taste, of seasoning sauce for preparing sea rainbow trout jerky. The proximate compositions of seasoning sauces with general, hot and terayaki tastes were 63.2, 64.0 and 65.0% moisture, respectively, 0.5, 0.6 and 0.6% crude lipid, respectively, 2.7, 2.5 and 1.8% crude protein, respectively, and 3.3, 3.1 and 3.4% ash, respectively. Taste activity values of seasoning sauces with general, hot and terayaki tastes were 1.09, 1.07 and 1.44 g/100 mL, respectively, for the total acidity, 586, 591 and 644 mg/100 mL for trichloroacetic acid (TCA) soluble nitrogen content, and 1.82, 1.84 and 2.21 g/100 mL, respectively, for salinity. The redness of Hunter color of seasoning sauces with general, hot and terayaki tastes was 1.9, 4.1 and 2.2, respectively. Because the results of total viable cells and coli form group were <30 CFU/mL and <18 MPN/100 mL, respectively, the seasoning sauces appeared safe as a seasoning sauce for sea rainbow trout jerky.

PP-44

Shelf-life of Seasoning Sauce for Sea Rainbow Trout Jerky

Sang In Kang[1], Ki Hyun kim[1], Jun Kyu Lee[1],Yong Jung Kim[1], Min-Soo Heu[2] and Jin-Soo Kim[1]

[1]Department of Seafood Science and Technology, Gyeongsang National University, Korea

[2]Department of Food Science and Nutrition, Gyeongsang National University, Korea

This study was conducted to investigate shelf-life of 3 kinds of seasoning sauces with general, hot and terayaki tastes for sea rainbow trout jerky. For investigation of shelf-life, the freshness of the seasoning sauces was measured by total viable cells, Coliform group and volatile basic nitrogen (VBN) after storage at 5, 10 and 15°C. Regardless of storage temperature (5, 10 and 15°C), period (90 days) and kinds of sauces, total viable cells and coliform group of all the seasoning sauces were <30 MPN/mL and 18 MPN/100 mL, respectively. According to the results of VBN contents of seasoning sauces with general, hot and terayaki tastes during storage at different temperatures, shelf-life of seasoning sauces for sea rainbow trout jerky stored at 5°C were 8.65 months for general taste, 11.53 months for hot taste, and 11.94 months for terayaki taste. The unit costs for producing 3 kinds of seasoning sauce were 45 won for general taste, 43 won for hot taste, and 54 won for terayaki taste, which corresponded to 3.6, 3.8 and 4.5% based on the total cost for producing seasoning sauce.

PP-45

Food quality characterization of commercial fish jerky

Ki Hyun kim[1], Sang In Kang[1],Jun Kyu Lee[1],Yong Jung Kim[1], Min-Soo Heu[2] and Jin-Soo Kim[1]

[1]Department of Seafood Science and Technology, Gyeongsang National University, Korea

[2]Department of Food Science and Nutrition, Gyeongsang National University, Korea

This study was conducted to investigate food quality characterization of 14 kinds of commercial fish jerkys (10 kinds of filefish jerky, 3 kinds of skipjack tuna jerky, and 1 kind of bastard halibut jerky). The proximate composition of commercial fish jerkys, such as bastard halibut, filefish and skipjack tuna jerkys, were 11.4-17.5% (13.9±1.8%), 15.5-28.3% (20.2±7.2%) and 17.0±0.1% moisture, 22.8-43.9% (28.1±6.6%), 39.9-48.3% (42.8±4.8%) and 70.4±0.1% crude protein, 0.1-2.9% (0.8±0.9%), 0.3-1.4% (0.8±0.6%) and 2.0±1.4% crude lipid, and 3.6-6.7% (5.3±0.9%), 4.0-5.1% (4.7±0.6%) and 4.4±0.2% ash. The water activity of commercial fish jerkys was 0.28-0.52 for bastard halibut jerky, 0.43-0.73 for skipjack tuna jerky, and 0.58 for filefish jerky. The total viable cells and *E coli* of commercial fish jerkys were 4.80-6.65 logCFU/g and not detected-2.5 logCFU/g, respectively, for bastard halibut jerky, 4.30-4.41 logCFU/g and not detected, respectively, for skipjack tuna jerky, and 4.83 logCFU/g and 1.4 logCFU/g, respectively, for filefish jerky. According to the chemical and microbial results, the commercial fish jerkys were very hard, appeared as instant seafoods.

PP-46

Food quality characterization of commercial beef, pork and chicken jerkys

Yong Jung Kim[1], Ki Hyun kim[1], Sang In Kang[1],Jun Kyu Lee[1], Min-Soo Heu[2] and Jin-Soo Kim[1]

[1]Department of Seafood Science and Technology, Gyeongsang National University, Korea

[2]Department of Food Science and Nutrition, Gyeongsang National University, Korea

This study was conducted to investigate the food quality characterization of commercial beef (3 kinds), pork (1 kind) and chicken (1 kind) jerkys. The proximate composition of commercial beef, pork and chicken jerkys were 26.5-31.3% (29.3±2.5%), 17.2±0.4% and 19.9±1.0% moisture, respectively, 38.7-41.2% (40.1±1.3%), 35.8±0.1% and 50.3% crude protein, respectively, 3.5-6.5% (4.6±1.6%), 4.3±1.4% and 2.3±2.4% crude lipid, respectively, and 5.1-6.0% (5.5±0.5%), 5.6±0.0% and 5.6±0.1% ash, respectively. The water activity of commercial beef, pork and chicken jerkys were 0.69-0.78, 0.42 and 0.54, respectively. The total viable cells and *E coli* of commercial jerkys were 4.30-4.41 logCFU/g and not detected, respectively, for beef jerky, 5.08 logCFU/g and not detected, respectively, for pork jerky, and 4.88 logCFU/g and not detected, respectively, for chicken jerky. According to the chemical and microbial results, the commercial beef, pork and chicken jerkys were soft, appeared as safe foods. However, these lipid composition suggests that the commercial beef, pork and chicken jerkys can be oxidized during storage and distribution.

PP-47

Effect of low molecular weight chitooligosaccharides (1-3kDa) on osteoblast Differentiation on bone marrow stem cell

Pathum Chandika and Won-Kyo Jung*

*Department of Biomedical Engineering, and Center for Marine-Integrated Biomedical Technology (BK21 Plus)
Pukyong National University, Busan 608-737, Korea

A variety of natural materials have been tested during last decades for osteoblast differentiation and bone tissue regeneration application. However, an ideal material has not yet been found for bone tissue regeneration applications. Chitooligosaccharides (COSs) are the polysaccharide products of chitosan and chitin degradation, which has reported numerous bioactivities. However, there are no studies found that identify the most effective molecular range of COS for bone tissue regeneration with stem cell. Hence this study focused on identifying highly active molecular weight (MW) COS fraction for osteoblast differentiation via multipotent bone marrow stromal stem (MBSCs or D1) cell. Initially, COS were successfully prepared into five fractions according to the MW (<1kDa, 1-3kDa, 3-5kDa, 5-10kDa and >10kD) using ultrafiltration membrane bioreactor system. Our results on in vitro cell culture experiment demonstrated that COS fraction (1-3kDa) has significant effect on osteoblast differentiation via increasing the expression of several osteoblast phenotype markers such as alkaline phosphatae (ALP) and bone mineralization on MBSC cell. Hence, this study provides high potential data for further development of tissue engineered substitute for bone tissue regeneration application.

PP-48

Effects of starfish peptide on MC3T3-E1 proliferation, differentiation and mineralization through MAPK and Smad pathway

Van-Tinh Nguyen and Won-Kyo Jung*

*Department of Biomedical Engineering, and Center for Marine-Integrated Biomedical Technology (BK21 Plus)
Pukyong National University, Busan 608-737, Korea

This study examined the effects of starfish peptide on osteoblast proliferation, differentiation and mineralization in the culture system of MC3T3-E1 cells. Pre-osteoblast MC3T3-E1 cells were cultured in various concentrations of starfish peptide (10-100 μg/mL) during the osteoblast differentiation period. To examine osteoblast differentiation, the alkaline phosphatase (ALP) activity was determined from the absorbance at 405 nm using a spectrophotometer and mineralization was evaluated by staining with Alizarin red. In addition, the expression of differentiation markers, osteocalcin, osteopontin, and type I collagen were measured using RT-PCR and Western blot analysis. The results showed that starfish peptides were enhancement on cell proliferation for 2, 5 and 7 days. Starfish peptide also enhanced MC3T3-E1 cells differentiation and mineralization demonstrated by increased the expression of several osteoblast phenotype markers such as alkaline phosphatase and collagen type I, and bone mineralization via Alizarin red S staining. In addition, the starfish peptide induced phosphorylation of MAPK and Smad pathway in MC3T3-E1 cells. These results suggest that starfish peptide possesses positive effects on osteoblast differentiation and may provide possibility for biomedical fields.

PP-49

Processings and Quality Characteristics of Boiled-Dried Anchovy *Engraulis japonica* Products with Green Tea Extract

Seong-Gwi Ryu[1]* and Kwang-Soo OH[2]

[1]Songmyung Fisheries Co., Korea

[2]Dept. of Seafood Science and Technology / Institute of Agriculture and Life Science, Gyeongsang National University, Korea

To develop the high value-added boiled-dried anchovy *Engraulis japonica* products including the boiled-dried anchovy sprayed with green tea extract (DASG), the boiled-dried anchovy boiled in salt and green tea extract solution (DABG) were prepared, and processing conditions, quality characteristics and storage stabilities were examined. From the anchovy oil-green tea extract reaction oven tests, GTE revealed antioxidative abilities including hydroperoxide and carbonyl compounds formation, and degradation of polyunsaturated fatty acids in anchovy oil. The moisture, crude lipid, volatile basic nitrogen contents of DASG and DABG were 23.6 and 23.6%, 6.0 and 5.9%, 20.9 and 18.2 mg/100 g, respectively. Regarding the fatty acid composition, DASG and DABG had a higher in polyunsaturated fatty acid (PUFA) ratios including 22:6n-3 and 20:5n-3, and had a lower in saturates and monoenes ratios than those of the traditional boiled-dried anchovy (TDA). The GTE treatments had a retard effects on lipid oxidation and degradation of PUFA during processing of the boiled-dried anchovy. Regarding the taste-active compounds, the free amino acid contents of DASG, DABG and TDA were 473.4, 482.2 and 505.1 mg/100 g, respectively, and the major free amino acids were taurine, histamine, alanine, aspartic acid, glutamic acid, glycine and lysine. The primary minerals were Na, S, P, K and Mg which did not differ significantly between these dried anchovies. The organoleptic qualities were not significantly different between DASG and DABG, whereas these presented products showed very good organoleptic qualities for masking of fish taste, color, odor and over-all acceptance than compared with TDA. From the results of physico-chemical experiments, DASG showed very good conditions for preserving the quality characteristics compared with TDA.

PP-50

Processings and Quality Characteristics of the High Quality Accelerated Salt-fermented Anchovy *Engraulis japonica* Sauce

Seong-Gwi Ryu[1]*, So-Jeong Lee[2], and Kwang-Soo OH[2]

[1]Songmyung Fisheries Co., Korea

[2]Dept. of Seafood Science and Technology / Institute of Agriculture and Life Science, Gyeongsang National University, Korea

To develop the high quality anchovy *Engraulis japonica* sauce, we examined processing conditions and quality characteristics of the accelerated salt-fermented anchovy sauce with the traditional salt-fermented anchovy sauce mixture (ASAS). The optimal processing conditions for ASAS were as followings. Large size anchovies caught by powered anchovy drag net were salted with 23% salt (w/w) for 24 hours, separated drained water, and then added 50% traditional salt-fermented anchovy sauce mixtures (w/w) and drained water. The salted anchovy mixtures filled in the jars and sealed tightly with paper and plastic film, and then salt-fermented at 21±1℃ for 12 months. Upper-layer lipids of the salt-fermented anchovy sauce mixtures were removed and residues of anchovy sauce were filterd out by micro-filtration. ASAS had a higher in total nitrogen and amino nitrogen contents, and had a lower in salinity than those of the traditional anchovy sauce (TAS). Regarding the taste compounds, the free amino acid contents of ASAS and TAS were 18,016.7 and 13,085.6 mg/100 g, respectively, and the major amino acids were alanine, glutamic acid, lysine, cystine, valine and leucine. The IMP contents of ASAS and TAS were 85.9 and 65.6 mg/100 g, and the primary minerals were Na, S, K, Mg and P. As the hygiene qualities of anchovy sauces, histamine contents of the ASAS and TAS were 12.6 and 25.2 mg/100 g, respectively, and *E. coli* of both anchovy sauces was negative. And protease activities of ASAS and TAS were 0.851 and 0.595 μM/unit, respectively. From the results of physico-chemical experiments and sensory evaluation, we concluded that the presented ASAS was more flavorable compared with TAS. As the accelerated anchovy sauce processing, the method of adding the salt-fermented anchovy sauce mixture could shorten the natural salt-fermentation periods more than half.

PP-51

Processings and Quality Characteristics of the Instant Juvenile Anchovy *Engraulis japonica* Porridge Powder Product

Seong-Gwi Ryu[1]*, Seon-Geun Kim[2], and Kwang-Soo OH[2]

[1]Songmyung Fisheries Co., Korea

[2]Dept. of Seafood Science and Technology / Institute of Agriculture and Life Science, Gyeongsang National University, Korea

To develop the high value-added instant juvenile anchovy *Engraulis japonica* porridge powder (JAP) using juvenile anchovy (JA) and pregelatinized unpolished rice, we examined optimal processing conditions, quality characteristics and storage stabilities. The presented JAP product was manufactured according to following unit processings; boiling and freeze drying of juvenile anchovy, complex extraction by hot-water extraction and enzyme hydrolysis, puffed drying of main cereal, mixing of pregelatinized main cereal and additives. As results of sensory evaluations, the complex extract from JA showed a enhancement of the taste of JAP by 5% adding. And the composition ratio of 50% unpolished rice, 5.0% JA complex extract (Brix 10°), 5.0% water, 25.0% freeze-dried boiled JA (wet basis), 3.0% salt, 3.0% sugar, 3.0% soybean protein, 3.0% milk cream, 0.35% dried-laver, and 0.3% dried-tangle was appropriate for the JAP. Moisture, crude protein, crude lipid, ash and carbohydrate contents of raw JA and JAP product were 81.5 and 6.4%, 14.8 and 18.7%, 0.3 and 4.8%, 2.6 and 5.6%, and 0.8 and 64.5%, respectively. Total amino acid contents of JA and JAP were 14,440 and 18,464 mg/100 g, respectively, and the major amino acids were aspartic acid, serine, glutamic acid, alanine, proline, leucine, isoleucine, phenylalanine, lysine and arginine. The primary minerals were Na, Ca, P and K. Especially the contents of Ca in JA and JAP which were respectively 588.8 and 2,383.1 mg/100 g were high. Regarding the organoleptic characteristics, JAP was superior to other commercial porridge products for quality characteristics, sensory acceptabilities and convenience for cooking. As a result of storage stability and shelf-life experiments during incubating test, the JAP product showed very good conditions for preserving the quality, and could be reserved in acceptable conditions for storage 60 days or more at 35±1°C. In conclusion, we believed that the JAP product had a good taste qualities, storage stability and convenience for cooking.

PP-52

Preparation of powdered protease inhibitor from skipjack tuna (*Katsuwonus pelamis*) roe extract and its keeping quality

Sung Hwan Park[1], Hyun Ji Lee[1], Ye-Seul Lee[1], Sang In Kang[2], Hyung Jun Kim[3], Jin-Soo Kim[2] and Min Soo Heu[1]*

[1]Dept. of Food & Nutrition/Institute of Marine Industry, Gyeongsang National University, Korea

[2]Dept. of Seafood Science & Technology/Institute of Marine Industry, Gyeongsang National University, Korea

[3]Newport Imported Food Inspection Center, Busan Regional Food & Drug Administration, Korea

Skipjack tuna has produced over 211,891 metric tons per year on overseas fishery in Korea (2012). Large volumes of tuna go through the canning process, which accounted for 66% of total canned product. Tuna roe as a byproduct generated 1.5-3.0% of total weight during seafood processing.

Fish and poultry roe have been reported to exhibited protease inhibitory activity, and it should be an alternative source of potential processing aids to improve texture in meat and low-salt fish products. Fish roe containing 11% albumin, 75% ovoglobulin and 13% collagen in protein, is generally used as animal feed and food preparation as protein sources in Korea. Protease inhibitors have been used for medical treatment of parasite disease and prevention of modori phenomenon, in which endogenous protease causes deterioration of the gel quality of surimi based products. Some food grade protease inhibitors, such as egg white, bovine plasma protein, potato powder, and whey protein concentrate have been used to prevent modori phenomenon. However, they cause side effects, such as color changes in surimi based products. To improve the physical properties and prevent the textural degradation of surimi gels, alternative food grade protease inhibitor for surimi production is still needed. A little information regarding the biochemical properties of protease inhibitor from the skipjack tuna roe has been reported. Membrane technology (i.e., ultrafiltration) seems more suitable for industrial applications because of lower operation costs and direct scale up. Ultrafiltration (UF) has been generally viewed only as a size-based separation process. In the present study, for effective utilization of fish roe, we fractionated a serine protease inhibitor from skipjack tuna roe using ultrafiltration system with ammonium sulfate fractionation and prepared to powder and liquid type inhibitors with stabilizer and cryoprotectant, respectively. Also, its keeping quality was examined into trypsin and chymotrypsin inhibitory activities during keeping time. The whiteness of powdered inhibitor (91.78) is significantly higher than that of liquid type inhibitor (46.50). pH values of prepared inhibitors were 5.27 for powder type and 5.03 for liquid type, and slightly decreased compare with control (pH 5.42) after preparation. Keeping quality of prepared inhibitors was in decline during 12 month according to inhibitory activity. Serine protease inhibitory activities of powdered inhibitor were more stable than that of liquid type. Chymotrypsin inhibitory activity prepared from skipjack tuna roe extract was higher than trypsin inhibitory activity. From these result, powdered protease inhibitor from skipjack tuna roe could be used as alternative food grade protease inhibitor to improve texture in surimi based products.

PP-53

Keeping quality and preparation of powdered protease inhibitor from yellowfin tuna (*Thunnus albacares*) roe extract

Hyun Ji Lee[1], Sung Hwan Park[1], Dong-Hui Kang[1], Sang In Kang[2], Jun Kyu Lee[2], Hyung Jun Kim[3], Jin-Soo Kim[2] and Min Soo Heu[1*]

[1]Dept. of Food & Nutrition/Institute of Marine Industry, Gyeongsang National University, Korea

[2]Dept. of Seafood Science & Technology/Institute of Marine Industry, Gyeongsang National University, Korea

[3]Newport Imported Food Inspection Center, Busan Regional Food & Drug Administration, Korea

Protease inhibitors commonly accumulate in high quantities in plant seeds, bird eggs and various body fluids. They are also found in mammalian and marine blood plasma and fish roe and viscera. The interest in understanding their physiological roles has increased in the past few years because of their important function in the regulation of different processes in which proteases are involved, such as intracellular protein breakdown, transcription, cell cycle, cell invasion, apoptosis, etc. Protease inhibitors have been used for medical treatment of parasite disease and prevention of modori phenomenon, in which endogenous protease causes deterioration of the gel quality of surimi based products. Some food grade proteases inhibitors such as egg white, bovine plasma protein, potato powder and whey protein concentrate have been used to prevent modori phenomenon. However, they cause side effects, such as color changes in surimi based products. Fish and poultry roe have been reported to exhibited protease inhibitory activity, and it should be an alternative source of potential processing aids to improve texture in meat and low-salt fish products. Fish roe containing 11% albumin, 75% ovoglobulin and 13% collagen in protein is generally used as animal feed or pet food preparation in Korea. Yellowfin tuna is epipelagic fish that inhabit the mixed surface layer of the ocean above the thermocline, and produced over 60,436 metric tons per year on overseas fishery in Korea (2012). Yellowfin tuna is widely used in raw fish dishes called sashimi. The roe of yellowfin tuna as a byproduct generated 1.5-3.0% of total weight from seafood processing. Membrane technology (i.e., ultrafiltration) seems more suitable for industrial applications because of lower operation costs and direct scale up. Ultrafiltration (UF) has been generally viewed only as a size-based separation process. To use of food grade protease inhibitor from the fish roe extracts, we fractionated a protease inhibitor from yellowfin tuna roe using ultrafiltration system after ammonium sulfate fractionation and prepared to powder and liquid type inhibitors with stabilizer and cryoprotectant. Also, their keeping qualities were examined into trypsin and chymotrypsin inhibitory activities during keeping time.

The whiteness of powdered inhibitor (87.99) is significantly higher than that of liquid type inhibitor (39.80). pH values of prepared inhibitors were 5.39 for powder type and 5.06 for liquid type, and slightly decreased compare with control (pH 5.96) after preparation. Serine protease inhibitory activities of powdered inhibitor were stable compare with that of liquid type during keeping time. Chymotrypsin inhibitory activity of prepared inhibitors was relatively higher than trypsin inhibitory activity. From the results, powdered inhibitor prepared from yellowfin tuna roe extracts can be utilized in surimi industry as food grade protease inhibitor and/or surimi ingredients.

PP-54

The effect of serine protease inhibitor fraction of skipjack tuna (*Katsuwonus pelamis*) roe extract on autolysis inhibition of minced muscle and surimi prepared from bastard halibut and mackerel

Hyung Jun Kim[1], Hyun Ji Lee[2], Sung Hwan Park[2], Sang In Kang[3], Jin-Soo Kim[3], and Min Soo Heu[2]*

[1]Newport Imported Food Inspection Center, Busan Regional Food & Drug Administration, Korea

[2]Dept. of Food & Nutrition/Institute of Marine Industry, Gyeongsang National University, Korea

[3]Dept. of Seafood Science & Technology/Institute of Marine Industry, Gyeongsang National University, Korea

Skipjack tuna roe in charged 1.5-3.0% of total weight is mainly used as protein source of animal feed or pet food preparation. It consisted of 11% albumin, 75% ovoglobulin and 13% collagen in protein content. Fish and poultry roe have been reported to exhibited protease inhibitory activity, and it should be an alternative source of potential processing aids to improve texture in meat and low-salt fish products. Bastard halibut which produced 293,567 metric tons in 2012, is a popularly cultured marine fish species in Jeju island of Korea, and is a potential raw material for surimi production. With the increasing demand for surimi products, more researchers are interested in the utilization of underutilized fish as a surimi resource. Mackerel is an important seafood that is consumed worldwide. Dark-fleshed pelagic fishes as a mackerel have gained increasing attention for surimi production. It is difficult to obtain high quality surimi from those species due to the high content of dark muscle, which contains a large amount of lipids and myoglobin. To improve the physical properties and prevent the textural degradation of surimi gels, beef plasma protein, porcine plasma protein, egg white, bovine plasma protein, whey protein and potato powders as food grade inhibitors have been used. But they cause side effects, such as color changes in surimi based products. Alternative food-grade protease inhibitors from seafood resource for surimi production are still needed. In order to make high quality surimi products from bastard halibut and mackerel, protease inhibitors are calling attention in protecting myofibrillar proteins from proteolysis by endogenous protease such as myofibril-bound serine proteases (MBSP). MBSP breaks down myosin heavy chain (MHC) most efficiently at around 55°C and also degrades other myofibrillar proteins such as a-actinin, actin and tropomyosin to some degree.

In the present study, we prepared to serine protease inhibitor (SPI) from skipjack tuna roe extract and investigated the inhibitory effect of SPI in protecting the proteolysis of bastard halibut and mackerel myofibrillar proteins caused by MBSP according to determination of TCA-soluble peptide contents, SDS-PAGE, and field emission scanning electron microscope. Based on TCA-soluble oligopeptide assay, autolysis inhibition of bastard halibut and mackerel minced muscle and surimi was observed at 60°C. At incubation condition (55, 60, and 65°C/1 h), SPI effectively inhibited endogenous serine protease in muscle and surimi of bastard halibut and mackerel at 60°C on the SDS-PAGE. The microstructure of minced muscle and surimi generally became denser with the addition of 3% SPI. In conclusion, the 3% SPI from skipjack tuna roe extract could be used as an alternative food grade inhibitor for the surimi production.

PP-55

Serine protease inhibitor fraction from yellowfin tuna (*Thumus albacares*) roe extract; Autolysis inhibition of minced muscle and surimi from bastard halibut and mackerel

Hyung Jun Kim[1], Sung Hwan Park[2], Hyun Ji Lee[2], Sang In Kang[3], Yong Jung Kim[3], Jin-Soo Kim[3] and Min Soo Heu[2*]

[1]Newport Imported Food Inspection Center, Busan Regional Food & Drug Administration, Korea

[2]Dept. of Food & Nutrition/Institute of Marine Industry, Gyeongsang National University, Korea

[3]Dept. of Seafood Science & Technology/Institute of Marine Industry, Gyeongsang National University, Korea

Autolysis of fish muscle has generally been recognized as resulting from endogenous proteases and as being associated with the quality loss of fish flesh as well as the softening of surimi gel products. In order to make high quality surimi products, protease inhibitors especially food additive grade inhibitors are calling attention in protecting myofibrillar proteins from proteolysis by endogenous protease such as myofibril-bound serine proteases (MBSP), which breaks down myosin heavy chain (MHC) most efficiently at around 55°C and also degrades other myofibrillar proteins such as a-actinin, actin and tropomyosin to some degree. The extracts from fish roe were rich in protease inhibitors that exhibited strong inhibitory activity against trypsin, a serine protease, and papain, a cysteine protease. In Korea, yellowfin tuna catches were about 60,436 metric tons on overseas fishery (2012). The yellowfin tuna is epipelagic fish that inhabit the mixed surface layer of the ocean above the thermocline. Also, it has been the important species for canning process. Yellowfin tuna roe, a byproduct generated from fish processing (1.5-3.0% of total weight), is generally used as pet food preparation. To improve the physical properties and prevent the textural degradation of surimi gels, various food-grade inhibitors such as egg white, bovine plasma protein, potato powder, and whey protein concentrate have been used. But alternative food-grade proteinase inhibitors from fish roe for surimi production are still needed. No information regarding the use of serine protease inhibitor (SPI) from yellowfin tuna roe has been reported in surimi production from bastard halibut and mackerel. Hence, this study was to investigate the inhibitory effect of SPI in protecting the proteolysis of bastard halibut and mackerel myofibrillar proteins caused by MBSP with a purpose to use SPI as a food ingredient in surimi production.

In this study, we investigated the inhibitory effect of SPI in protecting the proteolysis of bastard halibut and mackerel myofibrillar proteins caused by MBSP according to determination of TCA-soluble peptide contents, SDS-PAGE, and field emission scanning electron microscope. Based on TCA-soluble oligopeptide assay at incubation conditions (55, 60, 65°C / hr), autolysis inhibition of bastard halibut and mackerel minced muscle and surimi was observed at 60°C, which is similarly observed to the SDS-PAGE. The SPI more effectively prevented the myosin heavy chain (MHC) degradation of minced muscle and surimi from bastard halibut than mackerel because of difference in initial proteolytic activity between the two species. The microstructure of minced muscle and surimi generally became denser with the addition of 3% SPI. In conclusion, the 3% SPI from yellowfin roe extract could be an alternative food grade inhibitor for the surimi production.

PP-56

Changing temperature affects anesthetic effects and physiological stress responses in the marine medaka, *Oryzias dancena*

In-Seok Park[1]*, Young Ju Kim[1], Bong Seok Kim[2], Hee Jung Kong[2]

[1]Division of Marine Environment and Bioscience, Korea Maritime and Ocean University, Busan 606-791, Korea

[2]Biotechnology Research Division, National Fisheries and Development Institute, Busan 619-705, Korea

The aim of this study was to assess how changing temperature affects anesthetic effects and physiological stress responses in the marine medaka, *Oryzias dancena* and to determine the optimum temperature for heat- and cold-induced anesthesia. We determined the optimal anesthetic temperature for marine medaka from 36°C to 42°C and from 4°C to 10°C. After each anesthetic experiment, all experimental fish had survived the anesthetic temperatures. Whole-body cortisol and glucose levels of the experimental fish were also checked. Anesthetic effects on marine medaka increased significantly with both heat and cold ($P < 0.05$). The recovery time decreased significantly with both decreasing temperature (heat) and increasing temperature (cold; $P < 0.05$). Additionally, as temperatures rose, the operculum movement number (OMN) increased under heat anesthesia. When temperatures dropped, the OMN increased under cold anesthesia ($P < 0.05$). With anaesthetization at either 38°C or 8°C, the whole-body cortisol level was highest at 0 hour and decreased gradually until 6 hours, whereas the whole-body glucose level was highest at 1 hour and decreased until 2 hours.

PP-57

Surface Functionalization of Solid Substrates Inspired by Mussel Byssus Cuticle

Suyeob Kim and Sung Min Kang*

Department of Marine Biomaterials & Aquaculture, Pukyong National University, Busan 608-731, Korea

The protective coating on mussel (*Mytilus galloprovincialis*) byssus has attracted considerable research interest because of its excellent mechanical properties such as hardness and extensibility. These special properties are known to be highly related with specific interactions between mussel foot protein-1 and metal ions. In particular, the complexation between catechols in mfp-1 and iron(III) has been identified as a key interaction. This finding has given opportunities for pursuing promising applications. Herein, we report that emulating the properties of the mussel byssus cuticle provides an important platform for developing an advanced technique for surface modification. Layer-by-layer (LbL) films were constructed on solid substrates by sequential immersion of substrates into solutions containing iron(III) and catecholic compounds. The thickness of the LbL films was effectively controlled by increasing the immersion steps, and the reversibility of the LbL deposition was demonstrated by addition of a chelating agent.

PP-58

Effects of dietary inclusion of the various sources of additive on growth, feed utilization and challenge test of juvenile Korean rockfish (*Sebastes schlegeli*)

Hee Sung Kim[1]*, Sung Hwoan Cho[1], Mun-Gyeong Kwon[2]

[1]Division of Marine Environment and BioScience, College of Ocean Science and Technology, Korea Maritime University, Busan 606-791, Korea

[2]National Fisheries and Development Institute, Busan, Korea

Effects of dietary inclusion of the various sources of additive on growth, feed utilization and challenge test of juvenile Korean rockfish (*Sebastes schlegeli*) were determined. Seventy juvenile Korean rockfish (an initial body weight of 3.0 g) per tank were randomly distributed into 24, 200-L tanks. The eight kinds of experimental diets were prepared in triplicate: control (CON) with no additive, ginger (GG), cheonggukjang (CJ), blueberry (BB), persimmon leave (PL), tomato (TT), broccoli (BC) and yacon (YC). Each additive was included into the experimental diets at a ratio of 1% at the expense of wheat flour. Fish were hand-fed to apparent satiation twice a day for 7 weeks. At the end of 7-week feeding trial, twenty fish from each tank were randomly chosen and artificially infected by *Streptococcus parauberis* (KCTC11980BP) at the concentration of 1.2×10^6 cfu/mL for challenge test. The cumulative mortality of fish was monitored for the next 10 days after an artificial *S. parauberis* infection. Survival of fish was not affected by dietary inclusion of the various sources of additive at the end of 7-week feeding trial. However, weight gain and specific growth rate (SGR) of fish fed the YC diet were significantly ($P < 0.05$) higher than those of fish fed the all other diets. Weight gain and SGR of fish fed the GG diet was also significantly ($P < 0.05$) higher than those of fish fed the CJ, PL, TT and BC diets, but not significantly ($P > 0.05$) different from those of fish fed the CON and BB diets. Feed consumption was the highest in fish fed the YC diet, followed by BB, GG, CON, TT, CJ, PL and BC diets in order. Feed efficiency ratio (FER) of fish fed the YC and TT diets was significantly ($P < 0.05$) higher than that of fed the CON, GG, CJ, BB, PL and BC diets. FER of fish fed the CON and GG diets were significantly ($P < 0.05$) higher than that of fish fed the CJ, BB, PL and BC diets. Protein efficiency ratio (PER) of fish fed the CON, GG, TT and YC diets was significantly ($P < 0.05$) higher than that of fed the CJ, BB, PL and BC diets. In addition, PER of fish fed CJ, BB and PL diets was significantly ($P < 0.05$) higher than that of fish fed BC diet. The highest protein retention (PR) was obtained in fish fed the GG diet. And PR of fish fed the GG and BB diets was significantly ($P < 0.05$) higher than that of fed the CON, CJ, BB, PL, TT and BC diets, but not significantly ($P > 0.05$) different from that of fish fed the YC diet. The lowest FER, PER and PR was obtained in fish fed the BC diet. The proximate composition (moisture, crude protein, crude lipid and ash content) of fish was significantly ($P < 0.05$) affected by dietary inclusion of the various sources of additive. The cumulative mortality of fish fed CON diet was significantly ($P < 0.05$) higher than that of fish fed the all other diets at 4-day after *S. parauberis* infection throughout a 10-day observation. The cumulative mortality of fish fed the CON diet reached to 97%, which was highest, at 10-day after *S. parauberis* infection. The cumulative mortality of fish fed the TT, PL and BC diets was significantly ($P < 0.05$) higher than that of fish fed the CJ, YC, BB and GG diets at 10-day after infection. The lowest cumulative mortality was observed in fish fed the YC diet, followed by the BB and GG diets in order. In considering these results, it can be concluded that dietary inclusion of yacon and ginger seem to be recommendable to improve growth of juvenile Korean rockfish and yacon, blubbery and ginger have the positive effect to reduce mortality of fish at *S. parauberis* infection.

PP-59

Substitution effect of fishmeal with tuna byproduct meal (TBM) in the diets on growth performance and body composition of juvenile abalone (*Haliotis discus*)

Ye Eun Kim[1]*, Sung Hwoan Cho[1], Pil Youn Kim[2], Mun Kwan Kim[2]

[1]Division of Marine Environment and BioScience, College of Ocean Science and Technology, Korea Maritime and Ocean University, Busan 606-791, Korea

[2]Ocean and fisheries Research Institute, Jeju Special Self-Governing Province, Jeju 699-915, Korea

Substitution effect of fishmeal with tuna byproduct meal (TBM) in the diets on growth performance and body composition of juvenile abalone (*Haliotis discus*) was determined. Seventy juvenile abalone were randomly distributed into 18, 70-L plastic rectangular containers. Five experiments diets were prepared in triplicates. The 28% fishmeal and 13% soybean meal were included into the Con diet as the primary protein source. And 12% wheat flour and 4% dextrin, and 3% squid liver oil and 2% soybean oil were used as the carbohydrate and lipid sources, respectively in the Con diet. The 25, 50, 75 and 100% fishmeal were substituted with tuna byproduct meal (TBM), referred to as the TBM25, TBM50, TBM75 and TBM100 diets, respectively. Finally, the salted sea tangle (ST) was prepared to compare the effect of the experimental diets on performance of abalone. The essential amino acids, such as isoleucine, lysine and valine tended to decrease with dietary substitution of fishmeal with TBM in the experimental diets. And all essential and non-essential amino acid contents in the ST diet was relatively low. Survival of abalone fed the experimental diets was significantly ($P < 0.05$) higher than that of abalone fed the ST diet. Weight gain and specific growth rate (SGR) of fish fed the TBM25 diet were significantly ($P < 0.05$) higher than those of fish fed the all other diets. Weight gain and SGR of fish fed the TBM50 and TBM75 diets were also significantly ($P < 0.05$) higher than those of fish fed the TBM100 and ST diets, but not significantly ($P > 0.05$) different from those of fish fed the Con diet. The poorest weight gain and SGR was obtained in abalone fed the ST diet. Shell length and width of abalone fed the TBM25 and TBM50 diets were significantly ($P < 0.05$) longer and wider than those of abalone fed TBM100 and ST diets, but not significantly ($P > 0.05$) different from those of abalone fed the Con and TBM75 diets, respectively. The soft body weight to total weight of abalone fed the Con, TBM25, TBM50 and TBM75 diets, which were not significantly ($P > 0.05$) different from each other was significantly ($P < 0.05$) higher than that of abalone fed the TBM100 and ST diets. The proximates of the soft body of abalone was significantly ($P < 0.05$) different among treatments and relatively well reflected from dietary nutrient content. In conclusion, fishmeal up to 75% could be replaced with TBM in the diets without retardation of weight gain and SGR of abalone when the 28% fishmeal was included. And the significantly improvement in weight gain and SGR was obtained in abalone fed the diet substituting 25% fishmeal with TBM compared to those of abalone fed the Con diet.

PP-60

Involvement of density, illumination intensity and tank color in blind-side hypermelanosis of cultured starry flounder, *Platichthys stellatus*

Duk-Young Kang[1]*, Won-Jin Kim[2], Hyo-Chan Kim[1], Young Jin Chang[2]

[1]West Sea Fisheries Research Institute, NFRDI, Incheon 400-420, Korea

[1]Dep. Marine Bio-Materials & Aquaculture, College of Fisheries Sciences, PKNU, Busan 608-737, Korea

To find whether stocking density and illumination intensity affect the malpigmentation on the blind side (blind-side hypermelanosis) of starry flounder, *Platichthys stellatus*, we performed one density rearing test and one illumination rearing test for 120 days. The density test was done in duplicate at two density groups of 100 fish/tank (initial 73% PCA) and 400 fish/tank (initial 292% PCA) with the random selected flounder fries (TL 3.20±0.1 cm, BW 0.56±0.03 g) in glass aquarium tank (H40.5cm×L60cm×W35cm; bottom area 0.21 m^2). The illumination test was done in duplicate with the selected ordinary flounders (TL 17.3±0.5 cm, BW 84.3±2.8 g) at density of 100 fish/tank (initial 430% PCA). The rearing was performed in dark-green tanks (H40.5cm×L60cm×W35cm; bottom area 0.21 m^2) lighten with a illumination intensities of average 1,200 lux and average 200 lux, and in white tank lighten with a low intensity of average 230 lux. We investigated daily food intake (DFI), food efficiency (FE), growth, survival rate, and ratios of malpigmented blind-side area and ambicolored fish. In density test, although survival rate showed no difference between two groups, DFI and growth rate were significantly higher at the low density group than at the high density group. But the ratios of malpigmented blind-side area and ambicolored fish were not significantly different between two density groups. In illumination test, although DFI and weight gain were some higher in white group than two dark-green groups, the feeding rate, the growth and survival were not significantly different among groups. Also the malpigmentation in the blind-side of selected starry flounders was utterly not preceeding in all experimental groups during experimental periods after the initial day, Theses results are indicating that the illumination intensity and the brightness of background color do not affect the feeding, growth and the blind-side hypermelanosis in starry flounder, and suggesting that the blind-side hypermelanosis may be governed by a genetics trait inherited from parents.

Key words : density, illumination intensity, growth, feeding, blind side, hypermelanosis, flounder

*Corresponding author: dykang69@gmail.com

PP-61

Effects of the dietary protein levels and the protein to energy ratio in sub-yearling Persian sturgeon, *Acipenser persicus* (Borodin)

Mahmoud Mohseni[1, 2], Kumar Katya[2], Erfan Shahkar[2],
Hyeonho Yun[2], and Sungchul C. Bai[2*]
[1]International Sturgeon Research Institute, P.O. Box 41635-3464, Rasht, Iran
[2]Dept. of Marine Bio-materials and Aquaculture/ Feeds and Foods Nutrition Research Center, Pukyong Nat'l University, Busan 608-737, Rep. of Korea.

A 3 * 4 factorial design was used to evaluate the dietary protein requirement and to determine the optimum dietary protein to energy (P/DE) ratio in sub-yearling Persian sturgeon, *Acipenser persicus*, reared in the indoor flow through system. Twelve experimental diets ($_{40}P_{16}$, $_{40}P_{17}$, $_{40}P_{18}$, $_{40}P_{19}$, $_{45}P_{19}$, $_{45}P_{17}$, $_{45}P_{18}$, $_{45}P_{19}$, $_{50}P_{16}$, $_{50}P_{17}$, $_{50}P_{18}$ and $_{50}P_{19}$) were formulated and prepared to contain three protein levels (40%, 45% and 50%) and four digestible energy levels (16, 17, 18 and 19 kJ g^{-1} diet) at each protein level. Fish averaging 103.3 ± 3.5 (mean ± SD) were fed one of the experimental diets for 14 weeks. At the end of the experimental period, there were significant energy effects ($P < 0.05$) on weight gain (WG) and specific growth rate (SGR). Weight gain and SGR tended to decrease, with increase in dietary protein levels. Furthermore, there were significant protein and energy interaction effects on WG, SGR, hepatosomatic index and protein efficiency ratio. However, there were no significant dietary protein, energy or their interaction effects on feed efficiency for fish fed all diets. Weight gain and SGR of fish fed $_{40}P_{19}$ were significantly higher than those of fish fed $_{40}P_{16}$, $45P_{16}$, $_{45}P_{17}$, $_{50}P_{16}$ and $_{50}P_{17}$ diets ($P < 0.05$). There were no significant differences in WG and SGR among fish fed $_{40}P_{17}$, $_{40}P_{18}$, $_{40}P_{19}$, $_{45}P_{18}$, $_{45}P_{19}$, $_{50}P_{18}$ and $_{50}P_{19}$ diets. These results may indicate that the optimum dietary protein requirement and the P/DE ratio could be 40% protein and 22.0 mg protein kJ^{-1} ($_{40}P_{18}$), respectively, in Persian sturgeon, based on growth performance and feed utilization.

PP-62

Dietary magnesium hydrogen phosphate ($MgHPO_4$) as an alternative phosphorus source for growth and feed utilization of juvenile Israeli carp (*Cyprinus carpio*)

Tae-Hyun Yoon[1], Dong-Hoon Lee[2], Seung-Gun Won[1],
Chang-Six Ra[1] and Jeong-Dae Kim[1]*
[1]College of Animal Life Science, Kangwon National University, Chuncheon 200-701, Korea
[2]Gyeonggi Province Maritime and Fisheries Research Institute, Yangpyeong 476-841, Korea

The study was conducted to investigate a supplemental effect of magnesium hydrogen phosphate (MHP, $MgHPO_4$) as an alternative phosphorus (P) source on growth and feed utilization of juvenile Israeli carp (*Cyprinus carpio*). Three conventional P additives, monocalcium phosphate (MCP), dicalcium phosphate (DCP) and tricalcium phosphate (TCP) were compared as positive controls. The MHP was manufactured from struvite which was produced by a pilot scale reactor of the effective volume of 0.4 m^3 managed by Kangwon National University. The struvite producing process was operated using swine manure under the conditions of hydraulic retention time 3 h and pH 8-9 maintained by CO_2-stripping (aeration rate of 33 L/m^3.min). Magnesium chloride was added to meet Mg to P ratio of approximately 1.0. Collected precipitate from the reactor was dried and analyzed using X-ray diffractometer (XRD) (Rigaku, Model D/Max-2500V, Japan) to identify the formation of struvite. The MHP was obtained by removing ammonium-N through incineration of the recovered struvite at 550°C for 30 min. It was finely ground to use as a P additive. A basal diet as a negative control was prepared without P supplementation and 4 supplemental P sources were added at the level of 2%. Five groups of 450 fish having mean body weight of 6.5 g following 24 h fasting after three week adaptation period were randomly distributed into each of 15 tanks (30 fish/tank). Fish were hand-fed to apparent satiety twice a day for 9 weeks. Fish fed MHP had the highest weight gain (WG), protein efficiency ratio (PER) and specific growth rate (SGR) among treatments, although no significant differences ($P < 0.05$) were found between fish groups MHP and MCP. The lowest feed conversion ratio (FCR) was found in the MHP group, which was, however, comparable to that of the MCP group. All groups showed no mortality during the experimental period. Hematocrit (%) and hemoglobin (g/dL) were higher in fish groups fed MHP, MCP and DCP than in those fed TCP and control. Fish fed MHP showed a significant differences from fish fed TCP and control in hematocrit and hemoglobin. Plasma P (mg/dL) were kept from 6.3 (TCP) to 6.7 (MCP, DCP and TCP), while it was significantly lower in control group (4.3). The present results suggested that the MHP recovered from swine wastewater could be substituted for MCP as an alternative P source with respect to WG, PER, SGR and FCR.

PP-63

Isolation and characterization of multiple crystallin isoforms from mud loach (*Misgurnus mizolepis*)

Sang Yoon Lee[1], In Chul Bang[2] and Yoon Kwon Nam[1]*

[1]Department of Marine Bio-Materials & Aquaculture, Pukyong National University, Busan 608-737, Korea

[2]Department of Life Science and Biotechnology, Soonchunhyang University, Asan 336-745, Korea

Crystallins are water-soluble structural proteins expressed from a multigene family. Although crystallins are generally classified into three main types (alpha, beta and gamma crystallins) from eye lens of vertebrates, some crystallin isoforms have several metabolic and regulatory functions with enzymatic activities. Further these non-classical crystallin isoforms have often been reported to be found in other organs as well as in eye lens. In evolutionary perspective, it has also been reported that there are taxon-specific crystallin isoforms and the tissue expression patterns could also be different depending upon both species and isoforms. Unlike mammalian counterparts, characterization of isoform specific expression pattern from fish crystallins has not been yet extensively studied and remained to be further explored. In this study, we isolated diverse crystallin isoforms from mud loach (*Misgurnus mizolepis*; Cypriniformes), our model organism for studying isoform-specific regulation of teleostean crystallin genes. Based on NGS analysis of expressed sequences from mud loach, twelve isoforms classified into either alpha, beta, gamma, lambda, mu or zeta were isolated and their expression patterns in female and male tissues as well as in developing embryos and larvae were characterized by qRT-PCR assay. As a result, the multigene family represented various expression patterns depending on isoforms, in which several isoforms especially including alpha and beta types showed eye-exclusive or eye-predominant expression, whereas others such as zeta, lambda and some of gamma types represented a wider tissue distribution pattern of crystallin transcripts with variable expression levels across tissues. In developing embryos, eye lens-specific isoforms displayed the onset expression pattern which is in agreement with development of eye lens in this species. Data from this study suggest that crystallins may have differential roles in both lens formation and other cellular physiology including stress response and embryonic development in an isoform-specific fashion.

PP-64

Expression analysis of gender- and/or maturation-related genes in abalone (*Haliotis discus hannai*)

Sang Yoon Lee, Seung Pyo Gong, Yoon Kwon Nam*

Department of Marine Bio-Materials & Aquaculture, Pukyong National University, Busan 608-737, Korea

Abalone (*Haliotis discus hannai*) is one of the most important mollusk species in the Korean aquaculture domain. Although the mass production of abalone seedlings has become practical in the last decade, fine measure and control of reproduction of this species has been still remained to be further explored. In addition, generation of polyploidic abalones through chromosome-set manipulation necessarily requires the evaluation of maturation and reproductive performance in details of the polyploidy. Consequently, better understanding potentially maturation and reproduction-related genes in each gender should be of importance in getting deeper insight into the reproductive physiology of both normal diploid and polyploid abalones. In line with our long-term goal to address the reproductive capacity and mechanism of chromosome-set manipulated abalones, the objective of this study is to isolate potentially maturation-related genes and to examine any gender-related expression patterns. For this, we isolated fourteen gene transcripts (VTG, 5-HT, VEZPD2, SL, TekA1, DMRT-1, CNA, CDA, TSSK1, ER, NAMPT, DMC1, HORMA and GnRHR) from our NGS database, and examined the expression patterns in selected tissues (gill, gonad, gut, heart, muscles, hepatopancreas, and hemolymph) in a gender-specific manner. Based on qRT-PCR assay, the expression patterns could be classified into group-I showing significantly gender-dependent expression (*e.g.,* SL, TekA1 and others), group-II showing the predominant expression pattern exclusively in a certain tissue irrespective of gender (*e.g.,* VEZP2) or group-III showing relatively wide distribution across tissue with similar expression patterns in both genders (*e.g.,* CAN and CDA). Data from this study will be a useful basis to address the reproduction capability of ploidy-manipulated abalone stocks at cellular levels in future.

PP-65

Embryonic stem cell-like activities of long-term cultured embryonic cell line from marine medaka (*Oryzias dancena*)

Jun Hyung Ryu[1], Dongwook Lee[1], Yoon Kwon Nam[1,2], Dong Soo Kim[1,2], Seung Pyo Gong[1,2]*

[1]Department of Fisheries Biology, Pukyong National University, Busan 608-737, Korea

[2]Department of Marine Biomaterials and Aquaculture, Pukyong National University, Busan 608-737, Korea

Embryonic stem cells (ESCs) are a representative cell type having both continuous self-renewal activity and differentiation potential to give rise to all three germ layers. Such two properties have made ESCs a valuable material for cell replacement therapy in human and for transgenic research in animals. For this reason, many scientists in fish biotechnology have tried to establish ESCs or ESC-like cells from several fish species. Especially, *Oryzias latipes* haploid ESCs that combine both haploidy and pluripotency suggested the possibility for direct genetic analysis to study recessive and disease phenotypes. However, there has been a lack of marine model system to study fish ESCs-based genetic analysis and biotechnology despite of such efforts. Marine medaka (*Oryzias dancena*) can be proposed as a good marine model fish because it lives in brackish water and is able to acclimate a wide range of salinity. We previously established embryonic cell line from *O. dancena* blastula embryos and have cultured them during 2 years. In this study, to identify ESC activities of the long-term cultured embryonic cell line, we first established five sub-cell lines through clonal expansion of single cell and subsequently examined ESC activities including clonogenicity, alkaline phosphatase activity, pluripotency gene expression, and differentiation capacity on five sub-cell lines. All five sub-cell lines showed both clonogenecity and AP activity, but proportion of cells harboring both properties was significantly different among five sub-cell lines. Three pluripotency genes, *Klf4*, *Sall4*, and *Zfp281a*, were expressed in all five sub-cell lines except for one line in *Sall4* gene, while *Oct4* and *Nanog* gene expression was not detected in all ones. Although different formation rate and size of embryoid bodies (EBs) formed were detected among five sub-cell lines, all were able to form sufficient number of EBs, which have the capability to differentiate into other cell types in spontaneous manner. From this study, we identified that *O. dancena* embryonic cell line examined retains ESC-like activities in spite of long-term culture and the cell line possesses heterogeneous cell population on such activities. The results from this study will provide valuable information for developing marine model system in fish ESC-based researches.

PP-66

Primary culture of radula tissue-derived cells in abalone, *Haliotis discus hannai*

Min Sung Kim[1], Jun Hyung Ryu[1], Yoon Kwon Nam[1,2], Seung Pyo Gong[1,2*]

[1]Department of Fisheries Biology, Pukyong National University, Busan 608-737, Korea

[2]Department of Marine Biomaterials and Aquaculture, Pukyong National University, Busan 608-737, Korea

Abalone has been utilized as a valuable food source worldwide and thus farming of abalone has been actively conducted in some country. Establishment of immortalized cell lines from abalone can provide a good *in vitro* model to study various biological phenomenon including physiological properties and disease mechanism of the species, which will eventually contribute to improvement of the productivity and quality of the abalone. Unlike vertebrate species of which cell line derivation techniques have been established well, stable condition for establishing the cell lines from aquatic invertebrate species have been hardly reported and even the reports about cell line derivation are limited to several species including freshwater snail, *Biomphalaria glabrata* and crayfish, *Orconectes limosus.* In this study, as a first step for the final goal to establish abalone immortal cell line, we tried to find initial culture condition for primary cell population derived from *Haliotis discus hannai* radula tissue. Survival rate after cell isolation procedure by enzymatic digestion was as low as 9.95±2.37%. From three different experimental conditions that culture *H. discus hannai* radula-derived cells, we found that salinity of media and addition of growth-promoting factors were critical factors to support radula-derived primary cell population in initial culture. The growth factor-containing media which were adjusted to 35 psu salinity could induce 100% (8 out of 8 trials) initial cell attachment and the rate of cell attachment reached 50-70%. In addition, growth of these cell populations was detected at day 4 of culture, which were continuously retained without significant change up to day 9 of culture. The data obtained from this study will provide useful information for developing immortal cell lines from abalone species.

PP-67

Embryonic stem cell-like activities of long-term cultured embryonic cell line from marine medaka (*Oryzias dancena*)

Jun Hyung Ryu[1], Dongwook Lee[1], Yoon Kwon Nam[1,2], Dong Soo Kim[1,2], Seung Pyo Gong[1,2]*

[1]Department of Fisheries Biology, Pukyong National University, Busan 608-737, Korea

[2]Department of Marine Biomaterials and Aquaculture, Pukyong National University, Busan 608-737, Korea

Embryonic stem cells (ESCs) are a representative cell type having both continuous self-renewal activity and differentiation potential to give rise to all three germ layers. Such two properties have made ESCs a valuable material for cell replacement therapy in human and for transgenic research in animals. For this reason, many scientists in fish biotechnology have tried to establish ESCs or ESC-like cells from several fish species. Especially, *Oryzias latipes* haploid ESCs that combine both haploidy and pluripotency suggested the possibility for direct genetic analysis to study recessive and disease phenotypes. However, there has been a lack of marine model system to study fish ESCs-based genetic analysis and biotechnology despite of such efforts. Marine medaka (*Oryzias dancena*) can be proposed as a good marine model fish because it lives in brackish water and is able to acclimate a wide range of salinity. We previously established embryonic cell line from *O. dancena* blastula embryos and have cultured them during 2 years. In this study, to identify ESC activities of the long-term cultured embryonic cell line, we first established five sub-cell lines through clonal expansion of single cell and subsequently examined ESC activities including clonogenicity, alkaline phosphatase activity, pluripotency gene expression, and differentiation capacity on five sub-cell lines. All five sub-cell lines showed both clonogenecity and AP activity, but proportion of cells harboring both properties was significantly different among five sub-cell lines. Three pluripotency genes, *Klf4*, *Sall4*, and *Zfp281a*, were expressed in all five sub-cell lines except for one line in *Sall4* gene, while *Oct4* and *Nanog* gene expression was not detected in all ones. Although different formation rate and size of embryoid bodies (EBs) formed were detected among five sub-cell lines, all were able to form sufficient number of EBs, which have the capability to differentiate into other cell types in spontaneous manner. From this study, we identified that *O. dancena* embryonic cell line examined retains ESC-like activities in spite of long-term culture and the cell line possesses heterogeneous cell population on such activities. The results from this study will provide valuable information for developing marine model system in fish ESC-based researches.

PP-68

Effect of different concentrations of the seaweed extract on the memory enhancement in mice

Ji-Young Choi[1], Md. Mohibullah[1], Yong-Ki Hong[1]*, Il Soo Moon[2], Yang-chun Kim[3] and Seon-Yeong Hwang[3]

[1]Department of Biotechnology, Pukyong National University, Korea

[2]Department of Anatomy, College of Medicine, Dongguk University, Korea

[3]Gijang Local Product Co. Ltd., Korea

In previous study, the effect of different seaweed extracts in growing of neuronal cell has been reported. This finding can be further supported by in vivo mice experiment. Therefore in this study we have evaluated memory of mice through Morris water maze (spatial memory can be defined), Passive avoidance test (evaluate emotional memory), and Radial arm maze (Working memory can be checked in). Juvenile C57BL and mature C57BL were used. There are three different concentration of extract groups. To prepare the extract, seaweed powder ethanolic extract (95%) with the ratio 50:1 was dried in vacuum and nitrogen dryer. In Morris water maze test big pool with platform filled with white-colored tap water. The treated-mouse released into the pool until the mouse find the platform. The escape latency repeated for 5 days, and the next day, the time spent for mouse to find target area without platform was calculated. In Passive avoidance test, box with two sides, dark and bright, was prepared. When the mouse enters the dark side, we give an electric shock. Then check later, the mouse would go into the dark side or stay in the bright side. In radial arm maze test: The 8 arms-box were baited with the water in the end of each arm. The water-fasted mouse placed in the center of box and then calculate the number of errors and time for mouse explore the box. In Morris water maze test, decreasing rate of swimming time of mature mice administered with extract, was higher than control group, while in juvenile, it was different. In Passive avoidance test, juvenile group showed increasing tendency of remembering the shock. In higher concentration of extract group shows longer retention time after one day. In Radial arm maze test, both juvenile and mature of extract groups have a higher percentage of finishing the test than control. This is the first stage in identification of memory enhancing compounds from seaweed extract.

PP-69

Co-existence of neurotrophic and neuroinhibitory activities in the seaweed *Undaria pinnatifida*

Gabriel Tirtawijaya[1], Md. Mohibbullah[1], Il Soo Moon[2], Yong-Ki Hong[1]*

[1]Department of Biotechnology, Pukyong National University, Korea

[2]Department of Anatomy, Dongguk University College of Medicine, Korea

Common edible brown seaweed *Undaria pinnatifida*, called Miyeok in Korea, has been observed for neurotrophic and neuroinhibitory activity. The number of primary process and total length of primary process of rat hippocampal neurons in culture were the parameters for neurons development. Neurotrophic and neuroinhibitor compounds were observed by the extraction and separation of the seaweed. In the early stages, 80% of methanolic extract of *Undaria pinnatifida*, then fractionated into different classes according to polarity. Lipophilic groups (ethyl acetate and chloroform extracts) showed neurothropic activities. Lipophilic groups then eluted by silica gel column chromatography using n-hexane (UMA), methylene chloride (UMB), actonitrile (UMC), and methanol (UMD). The result showed UMA and UMD have neurotrophic activities. Further UMA was eluted by silica gel column chromatography using petroleum ether (HA), 6% ethyl ether in petroleum ether (HB), 10% ethyl acetate in petroleum ether (HC), ethyl ether (HD), and the mixture of methanol:acetic acid:water – 80:10:10 (HE). Neurotrophic activities have been found in HB and HC, while HD is neuroinhibitor. UMD fraction also eluted by silica gel column chromatography using acetonitrile:methanol (gradually 80:20 to 0:100). The elution using acetonitrile:methanol 80:20 (UMAM82) and 60:40 (UMAM64) showed neurotrophic activities, while acetonitrile:methanol 0:100 (UM23M) is neuroinhibitor.

PP-70

Evaluating the regeneration of the sea cucumber *Apostichopus japonicus* gut upon feeding with various seaweeds

Pham Truong Giang[1] and Yong-Ki Hong[2]*

[1]KOICA-PKNU International Graduate Program of Fisheries Science

[2]Department of Biotechnology, Pukyong National University

Sea cucumber is one of the high-valued economy species with vital nutritional values, medicinal purposes and physiological functions. Especially, sea cucumber gut (Konowata) is well known for nourishment. In the present study, sea cucumber's with average body weight of 28.5 ± 11.0 gram were bought from market and kept for 1 day for acclimation.Then, eviscerated with injection of 0.7 M KCl, after releasing the gut, the animals were kept in aquarium for 1 week at 14 ^{o}C ± 2, 14L: 10D and with dissolved oxygen level of 6.0 mg L^{-1}; ammonia concentration was less than 0.3 mg L^{-1}; pH ranged from 7.8 to 8.2; salinity ranged from 28 to 30 ppt. After 1 week of recovery from evisceration, seacucumber were fed with powder of 8 different seaweed species mixed with autoclaved sand with 1:1 ratio for 14 days. Among the seaweeds fed *Corallina pilulifera, Sargassum fulvellum* and *Codium foagile* have higher effect in gut weight gain ranged between 0.104 ± 0.05 w/w and 0.101 ± 0.02 w/w while other group including *Eckonia stolonifera, Hizikia fusiformis, Gracilaria verrucosa, Porphyra yezoensis, and Eisenia bicycle* showed the least effects which ranged between 0.05 ± 0.04 w/w and 0.08 ± 0.003 w/w. However, in previous study, *Eckonia cava* was found to be the best seaweed species for sea cucumber gut regeneration, which can reach 0.1085 ± 0.01 w/w. Considering different ratios of mixed *E. cava* powder and sand 2:1; 1.5:1; 1:1; 0.5:1; 0.2:1; 0.1:1; 0:1, ratio of 1.5:1 has given the higest gut weight gain effect which reached 0.11 ± 0.02 w/w. Similarly, ratio of 1:1 and 2:1showed gut weight gain of 0.096 ± 0.03 w/w and 0.09 ± 0.04 w/w respectively. Lower effects were found at rations of 0.5:1 and 0.2:1 ratio, while the lowest gut weight gain being at ratio of 0.1:1 and 0:1ratio, which reached 0.042 ± 0.02 w/w, 0.02 ± 0.02 w/w respectively. This study has showed the potential of various seaweeds especially *E. cava* ratios used as sea cucumber feed for effective regeneration of gut.

PP-71

Differential neuritogenic activity of two edible brown macroalgae, *Undaria pinnatifida* and *Saccharina japonica*

Md. Abdul Hannan[1, 4], Seon-Yeong Hwang[3], Kyungyong Lee[3],
Yang-Chun Kim[3], Yong-Ki Hong[1]* and Il Soo Moon[2]
[1]Department of Biotechnology, Pukyong National University
[2]Department of Anatomy, College of Medicine, Dongguk University
[3]Gijang Local Products Co. Ltd
[4]Department of Biochemistry and Molecular Biology, Bangladesh Agricultural University

The *Undaria pinnatifida* (Miyok) and *Saccharina japonica* (Dashima) are the two common brown algae, known to have numerous pharmacological properties including neuroprotective activity. In our previous report, ethanol extracts of *U. pinnatifida* (UPE) and *S. japonica* (SJE) had shown neurite promoting activity in developing hippocampal neurons. Here, we examined whether the initial neurite promoting effect of UPE and SJE was followed on the further neuronal maturation. Simultaneously, we compared their activity throughout the study. Both UPE and SJE promoted neurite outgrowth in a dose-dependent manner with optimal concentration of 5 and 15 μg/mL, respectively. The initial neuronal differentiation is significantly promoted by UPE and SJE. Subsequently, both UPE and SJE increased the indices of axonal and dendritic cytoarchitecture such as the number and the length of primary processes, and branching frequencies, although the effect of SJE on branching frequencies is insignificant. In addition, both UPE and SJE did not show any cytotoxicity, rather support neuronal survival by protecting neurons from naturally occurring death in vitro. The results indicate that algal extracts, UPE and SJE promote axodendritic maturation as well as neuronal survival suggesting the beneficial effect of these algae, particularly UPE in the nervous system.

PP-72

Potential of Agar-paper Waste extracted from Different Seaweed Raw Material for Bioethanol Production

Maria Dyah Nur Meinita[1*], Bintang Marhaeni[1], Yong-Ki Hong[2]

[1]Fisheries and Marine Department, Jenderal Soedirman University, Indonesia

[2] Biotechnology Department, Pukyong National University, South Korea

[*]Email address : maria.meinita@unsoed.ac.id

Bioethanol is the one of most potential renewable biofuels that appropriates to solve our dependency on the fossil fuel. Seaweed resources can be good raw material to produce ethanol. Seaweeds possess comparable bioethanol producible carbohydrate to those of land plants. Indonesia has great potency to develop the bioethanol from seaweed particularly red seaweed which categorized as carrageenophyte (carrageenan producing seaweed) and agarophyte (agar producing seaweed). As we know Indonesia is the biggest producer of agar and carrageenan in the world. In our previous research (2008-2013) we found that red seaweed both carrageenophyte and agarophyte have a great potential to produce bioethanol.

Gracilaria is a genus of red seaweed that is commonly used as raw material in agar industry. Type of agar industry that exist in Indonesia consist of home industries and factories. Both industries have the potential to generate waste. Waste resulted from seaweed processing industry is a potential source of biomass which can be developed into an alternative bioenergy source. The purpose of this study was to determine the content of total sugar and bioethanol production from agar-paper waste which using different seaweed as raw material i.e. Gracilaria gigas, Gracilaria verrucosa and Gracilaria salicornia. Phenol-sulfuric acid method is used to analyze the total sugar content and hydrolysis is used to increase the total sugar content. These result indicate that the highest total sugar content was found in agar-paper waste resulted from Gracilaria salicornia extraction.

Key words: *Gracilaria*; Waste; Total sugar; Bioethanol

PP-73

Inhibitory activity of several seaweed extracts on rhizoid formation of the red alga *Porphyra suborbiculata*

Mehader Getachew and Yong-Ki Hong
Department of Biotechnology, Pukyong National University

Marine algae are one of the common fouling organisms causing considerable structural and economic damage to man-made structures such as ship hulls. So far, most antifouling techniques have relied on organotin or heavy metals based paints that act as broad spectrum toxins to target and non-target marine organisms. Naturally occurring antifouling compounds are the most promising alternative techniques to prevent the attachment of fouling organisms. Therefore, in this study we have investigated the inhibitory and enhancement activities of different seaweed extracts against the well known fouling species of red algae, *Porphyra yezoensis.* Seaweed thalli collected from the coast of Korea were dried completely at room temperature and then grinded to fine powder. For each 20 mg sample, one mL of methanol was used to extract methanol soluble fraction at room temperature for 24 hrs. For a stock solution of methanol soluble fraction one mL of methanol was added for every 40 mg dried extract to make final concentration. The blade tissue of *P. yezoensis* both from aquaculture and wild were collected, sonicated twice for 1 minute in autoclaved seawater and immersed in 1% of betadine to eliminate epiphytes. For each well of a 24-well plate, 5 mm sized blades were cultured in one mL of seawater with added PES at 18 ^{0}C under 40 µmol m^{-2} s^{-1} light intensity on a 12L: 12D cycle for 1 wk. For assay of spore germination, method by Cho et al. (2001) was followed. To investigate the existence of inhibitory and enhancement activities of eighteen seaweed extracts, two different concentrations of 40 mg/mL and 4 mg/mL from each methanol extract were added to the spore of *P. yezoensis* .At both 40 mg/ mL and 4 mg/mL *Hizikia fusiformis* extract showed the highest inhibitory effect on the rhizoid production, rhizoid growth and germinated and juvenile blade growth. Also, extracts from *Ulva pertusa, Entromorpha linza, Undaria pinnatifida, Sargassum lomentaria, Ecklonia cava* showed significant growth inhibition activities *($P < 0.01$)*. In contrast, *Codium fragile* extract have shown enhancement effect in rhizoid production and juvenile blade growth at 40 mg/ mL concentration. At lower concentration of 4 mg/mL similar effects were observed. In both *Hizikia fusiformis* and *Codium fragile* 20 mg/mL concentration was found to show effective inhibitory and enhancement activities respectively. Among the five fractions isolated from the *H. fusiformis* methanol extract, ethyl acetate, chloroform-methanol and chloroform fractions have shown significant inhibitory activities against the growth of the *P. yezoensis* spore. This study is a preliminary screening and optimizing conditions of inhibitory and enhancement activities, which finally will to isolate a purified compound with the mentioned activities.

PP-74

Induced changes in the proteomic profile of the Phaeophyta *Saccharina japonica* upon colonization of the hydrozoan, *Obelia geniculata*

Paulos Getachew, Yong-Ki Hong
Department of Biotechnology, Pukyong National University

Seaweeds inhabit the subtidal and lower intertidal zone of marine rocky shores worldwide are commonly exploited as a substratum by numerous sessile organisms and colonial suspension-feeding animals. The stoloniferous hydrozoan *O. geniculata* is as such epizootic organisms commonly colonize aquacultured seaweed. Colonization by *O. geniculata* is generally believed to reduce the rate of photosynthesis by reducing pigment concentration, decreasing ammonium uptake rates in algal tissues, and reducing spore release from fertile blades. The colonization may also lead to changes in biochemical composition at the protein level of the host. Protein profiling using proteomics can be used to identify marker proteins that are up- or down-regulated in response to such environmental stresses. In this study, we therefore investigated differentially expressed proteins in *S. japonica* tissues in response to *O. geniculata* colonization and their primary roles in cellular activities. Fresh blades of late harvested *S. japonica* were collected from Gijang aquaculture farm, Busan, Korea, washed and cleaned with seawater. Surface parts of the blade covered by *O. geniculata* were selected, and the colonies were gently scratched off. Healthy tissues approximately 30 cm far from the colonized tissue were used as a control. Both colony-removed and healthy tissue were immediately freeze-dried, ground to a fine powder, and kept at -70°C before analysis. Protein preparation was followed the method of Kim et al. (2011) with some modifications. Protein spots were enzymatically digested in-gel by the method of Shevchenko et al. (1996). For identification of proteins, samples were analyzed using a 4700 Proteomics Analyzer with matrix-assisted laser desorption ionization–time of flight (TOF)/TOF™ ion optics (Applied Biosystems, USA). Sequence tag searches were performed via a National Center for Biotechnology Information (NCBI) search using the program Mascot (Matrix Science, UK) and European Molecular Biology Laboratory (EMBL) search using MS BLAST. A total of 91 and 52 protein spots were identified in the healthy and colonized tissues respectively. Among them 10 and 78 spots were up- and down-regulated by significant difference of expression level upon the colonization. In the *O. geniculata* colonized tissue, microcompartments, carboxysome shell peptide, RIKEN cDNA, 1 uncharacterized protein and 1 hypothetical protein were up-regulated; whereas transmembrane protein, protoporphyrinogen oxidase, dual oxidase 2 like, PIH1 domain containing protein 2, putative GTPase activating protein alpha, threonyl-tRNA synthetase, flavanone 3-hydroxylase, uncoupling protein 3, vanadium dependent bromoperoxidase, peptide chain release factor 1 and interaptin were down-regulated. Interestingly, Cell-division control/minichromosome maintenance protein was newly expressed in the colonized tissue. Most of the up- and down-regulated proteins are known to be related in stress control, defense mechanism, signal transduction, photosynthesis, protein metabolism, and cytoskeleton.

PP-75

Edible Marine Algae Alleviates Hypoxia/reoxygenation Induced Oxidative Stress in Hippocampal Neurons

Md. Mohibbullah[1]*, Ji-YoungChoi[1], Jae-Suk Choi[3], InSoonChoi[3,4], Yong-KiHong[1] and Il Soo Moon[2]

[1]Department of Biotechnology, Pukyong National University,

[2]Department of Anatomy, College of Medicine, Dongguk University,

[3]RIS Center ,IACF, Silla University,

[4]Department of Biological Science, Silla University

Age related neurological disorders are growing concern among the elderly persons. Natural products with synergistic properties have been increasing attention as potential candidates for the prevention or treatment of neurological disorders induced by oxidative stress. As an effort to explore the natural resources that may have neuroprotective activity, we worked on some common marine algae assumed to be a potential source of bioactive compounds and screened for their neuroprotective activity based on propidium iodide (PI) and lactate dehydrogenase (LDH) assays for the viability of rat primary hippocampal neurons against hypoxia/reoxygenation induced cell death. To elucidate the action mechanism of algal extract, hypoxia/reoxygenation was treated resulting in the consequence of ROS cells by fluorescent probe DCF staining, Immunocytochemistry with anti pohospho-H2AX antibody (early apoptotic marker) counted as puncta per cells, the number of apoptosis cells by Annexin V/PI staining, DNA fragmentation by agarose gel electrophoresis, and mitochondrial membrane depolarization by JC-1 labeling were significantly inhibited in all of the algal pretreated cells. Taken together, our findings suggested that algal could exert a neuroprotection through the free radical scavenging acitivity and the regulation of apoptosis, thereby in ability of managing neurodegenerative diseases.

PP-76

Physiological changes of Israel carp, *Cyprinus carpio nudus*, reared in water with Biofloc

Nam-eun Kim, Ah-ran Kim, Su-il Park, Do-hyung Kim
Department of Aquatic Life Medicine, Pukyong National University, Korea

In recent years, much attention has been paid to biofloc technology in aquaculture management, in terms of both maintenance of water quality and reduction of feed conversion ratio. Also it is known that biofloc has a potential to control pathogens and stimulate immune responses of cultured animals. This study was conducted to identify heterotrophic nitrifying bacteria in biofloc water, and to investigate its effect on the non-specific immune responses and physiological changes of Israel carp, *Cyprinus carpio nudus*. Biofloc water obtained from a catfish farm. A total of 60 fish were reared for 28d.

Heterotrophic nitrifying bacteria were isolated from biofloc water, and three species were identified as *Acinetobacter bouvetii, Acinetobacter tjernbergiae* and *Lactococcus lactis* by 16s rRNA gene sequences. Ammonia-nitrogen values in a biofloc water group were maintained for first 7 days. Bacterial counts were persistent until day 7, and the number was continuously increasing until day 28. Average body weight and length in a biofloc group were increased compared with those of control group. However, there were no significant differences between experimental and control group in physiological parameters, hematocrit, AST and ALT, except for gut mucus lysozyme activity and NBT reduction ability, which were significantly higher than control on day 7.

In conclusion, the biofloc water has effects on improvement of growth rates and showed no harmful effects on physiology of Israel carp. Hence, it is promising that biofloc technology can be applied to not only shrimp farming but also fish, such as Israel carp.

PP-77

Effects and usefulness of biofloc technology in common carp (*Cyprinus carpio*) culture

Ah-Ran Kim, Nam-Eun Kim, Soo-Il Park, Do-Hyung Kim
Department of Aquatic Life Medicine, Pukyong National University

Biofloc technology is as an environmental friendly aquaculture system since nutrients could be continuously recycled and water exchange can be minimized. The objectives of this study were to obtain information on effects of biofloc on bacterial fish pathogens and water quality in culture of common carp (*Cyprinus carpio*). In this study, juvenile common carp (*Cyprinus carpio*) were reared in biofloc water obtained from a catfish farm. *Listonella angilluarum* and *Aeromonas hydrophila* were used as a pathogen to study their survival in biofloc water. Unlike control group, toxic nitrogen in biofloc water did not reach to harmful levels to carp, indicating its buffering capacity of toxic compounds. A total of 28 heterotrophic bacterial species were isolated from biofloc water used in this study. It turned out that diverse microbiota in biofloc water showed inhibitory effects on *L. anguillarum* and *A. hydrophila*. The fish in biofloc water showed higher growth rate, increased lysozyme activities in the skin mucus, and stable level of spleen somatic index(SI) compared with control group. From these results, it is suggested that SI could be one of useful stress indicators for farmed fish. In conclusion, biofloc water used in this study has clearly beneficial effects on improvement of growth rate of common carp and inhibition of pathogenic bacteria. Therefore, biofloc technology is an efficient alternative system that can be applied to carp farming.

PP-78

The antibiotics efficacy study against *Edwardsiella tarda* in olive flounder, *Paralichthys olivaceus*

Yun-jin Lim* and Do-hyung Kim

Department of Fisheries Science Aquatic Life Medicine, Pukyong National University, Korea

Edwardsiellosis caused by *Edwardsiella tarda* is an important disease in fish farming in Korea. Control and prevention for the diseases is still hard although commercial vaccines for the pathogen are recently available. The aims of this study were to determine the most effective chemotherapeutic method and dose of appropriate antibiotics in olive flounder to treat edwardsiellosis. Before the *in vivo* test, antimicrobial susceptibility testing was conducted using the florfenicol, enrofloxacin, amoxicillin, oxytetracycline, trimethoprim. Of these, antimicrobial susceptibility of florfenicol was better than other agents. Three *in vivo* experiments were conducted in this study. Experiment 1 was to determine the appropriate dose of florfenicol in feed to control mortality in olive flounder after oral infection with *Edwardsiella tarda*. Each group of 15 fish were fed with feed mixed with different doses of florfenicol, 5, 10 and 15 mg kg^{-1} of fish body weight, respectively, after oral infection with *E. tarda* at a final concentration of 5×10^7 CFU mL^{-1}. Antibiotic treatment was initiated two days after challenge was done for 10 consecutive days. Dead and moribund fish were removed and examined microbiologically and pathologically for 3 weeks. Survived fish were used to check the presence of *E. tarda* in the spleen, kidney, and gut mucus. The second experiment was to evaluate *E. tarda* burden in the same tissues and mucus after each group was given medicated feed (15 mg ffc kg^{-1} of fish body weight) for 3, 5, 7 and 10 days. As a result, mortality of a group fed at concentration of 0, 5, 10 and 15 mg ffc kg^{-1} was 100, 20, 13.3 and 6.7 %, respectively. In addition, the longer administration periods take, the less mortality rates and bacterial burdens were observed. Therefore, the most effective oral treatment method is to administer at a concentration of 15 mg ffc kg^{-1} for 10 days, which is different from recommended dose (10 mg ffc kg^{-1}) and medication time (5 days).

PP-79

Development and validation of a real-time PCR assays for the rapid detection of *Streptococcus parauberis*

Luan Nguyen Thanh, Lim YunJin and Kim Do-Hyung

Department of Aquatic Life Medicine, College of Fisheries Science, Pukyong National University, Busan, Korea

Streptococcus parauberis is an increasing threat to national aquaculture of cultured olive flounder (*Paralichthys olivaceus*) in South Korea. Therefore, a sensitive, specific, and reproducible method for detection and quantification of this pathogen is needed urgently. In this study a real-time PCR assay using TaqMan probe labelled with FAM (6-carboxyfluorescein) and targeted the phylogenetic gene of the genus Streptococcus members for the specific detection of *S. parauberis* was developed. With the tenfold dilution series of the purified gDNA of *S. parauberis*, the assay was capable of detecting as little as 10 fg of genomic DNA per reaction and showed a good reproducibility, with intra- and inter-assay coefficient of variation less than 1.95% and 1.65%, respectively, when were assessed in triplicate. In experiment of specificity, no cross-reactivity to *Streptococcus iniae* or to other Streptococcus fish-pathogenic bacteria was found, indicating that it is highly specific to *S. parauberis* strains. Results using artificially inoculated duplicate tissues including spleen, kidney, and gut mucus indicated that the assay corresponded well to those of conventional culture assays for *S. parauberis* ($r = 0.957$; $P < 0.05$) and can provide sensitive species-specific detection and quantification of this pathogen in fish tissue. Consequently, this sensitive, specific, and reproducible real-time PCR is not only a valuable tool for diagnostic quantitation of *S. parauberis* in clinical samples, but also a crucial step for effective management, timely treatment, and determining the origin of disease outbreaks. Furthermore, this assay may provide an important tool in future studies of *S. parauberis* pathogenesis such as investigating bacterial replication, kinetic analysis in host cells, and host-bacteria interactions.

PP-80

Genomic cloning and characterization of the Korean rose bitterling Rhodeus uyekii beta-actin gene

Ju Lan Kim, Eun-Ha Shin, Woo-Jin Kim, Hyung Soo Kim, Bong-Seok Kim,
Cheul Min An and Hee Jeong Kong*
Biotechnology Research Division, National Fisheries Research and Development Institute, Korea

Korean rose bitterling *Rhodeus uyekii* belongs to the Acheilognathinae subfamily of the Cyprinidae family, which has been considered a candidate for development of ornamental fish in Korea. To develop the promoter driving constitutive transgene expression, we identified and characterized the beta-actin gene of the Korean rose bitterling (Ru-actb). The genomic organization of Ru-actb is conserved with vertebrate beta-actin genes, which contains six exons including first non-expressed exon. The Ru-actb gene has regulatory elements a typical CAAT box, an evolutionary conserved CArG motif, and a TATA box in the proximal promoter region, and additional CArG motif in the first intron. The regulatory region of Ru-actb gene covering from -4,474bp to ATG start codon drives the expression of luciferase in the cells or red fluorescent protein in zebrafish and Korean rose bitterling. Ru-actb mRNA was ubiquitously detected in all tissues, highly expressed in brain, kidney, stomach and intestine, and weakly expressed in eye, gill, fin, hepatopancreas, spleen, muscle, testis and ovary. These results suggest the regulatory region of Ru-Actb may use for developing a useful promoter for transgene expression in fish.

PP-81

Targeted Erythrocyte Ablation in Tg[RBC:Gal4] Transgenic Zebrafish

Hee Jeong Kong[1]*, Jae-Ho Ryu[2], Ju Lan Kim[1], Woo-Jin Kim[1], Hyung Soo Kim[1], Cheul Min An[1], Jehee Lee[3] and Sang-Yeob Yeo[2]*

[1]Biotechnology Research Division, National Fisheries Research and Development Institute, Korea

[2]Department of Chemical and Biological Engineering, Hanbat National University, Korea

[3]Department of Chemical and Biological Engineering, Hanbat National University, Korea

Chlorothalonil is a broad-spectrum chlorinated fungicide, that is highly efficient against pathogens that infect mainly vegetables, fruits, and crops. But chlorothalonil are considered potential pollutants due to their high application rate, their persistence, and their toxicity to human and other species. To remove toxic organic compounds such as pesticides, both biological and chemical treatments have been suggested. A biological treatment of the toxic organic compounds (bioremediation), using microorganisms or enzymes produced from the microorganisms or plants, is often considered as an environmentally favorable method. To date, however, there have been no unambiguous reports about the bioremediation of soil contaminated by chlorothalonil. *Ochrobactrum anthropi* SH35B, capable of efficiently biotransformingthe fungicide chlorothalonil, was isolated from soil. A gene responsible for the chlorothalonil-biotransformation was cloned from the strain. The gene was determined by the nucleotide sequence. The gene was expressed in *Escherichia coli* and purified by affinity chromatography. Then, the enzyme was characterized. A gene responsible for the chlorothalonil- biotransformationn was cloned from *Ochrobactrum anthropi* SH35B, The gene was determined to be an open reading frame (ORF) for the glutathione *S*-transferase (GST) by the nucleotide sequence. The fungicide chlorothalonil was rapidly transformed by the GST in the presence of glutathione. LC-MS analysis supported the formation of mono-, di- and tri-glutathione conjugates of chlorothalonil by the GST. The mono-glutathione conjugate was observed as an intermediate in the enzamatic reaction. The tri-glutathione conjugate has not been previously reported and seems to be the final metabolite in the biotransformation of chlorothalonil.

PP-82

Stress responsible glucocorticoid receptors in medaka fish

Young Chang Sohn
Department of Marine Molecular Biotechnology, Gangneung-Wonju National University

Corticosteroid signaling mechanisms mediate a wide range of adaptive physiological responses, including those essential to intermediary metabolism, reproduction, anti-inflammatory function, and stress response. The production of corticosteroids is under the control of the hypothalamus–pituitary–interrenal (HPI) axis and the genomic effects of corticosteroids are mediated through two intracellular corticosteroid receptors, glucocorticoid receptor (GR) and mineralocorticoid receptor. To obtain basic information on the marine medaka GRs, we first cloned two types of GR cDNA, GR1 and GR2, and subsequently examined their ligand-induced transcriptional activities along with coregulators. A unique nine-amino acid sequence in teleost GR1 was functionally evaluated via the molecular swapping of this sequence into GR2. The present study reveals interesting characteristics of teleost GRs and will provide increased understanding of corticosteroid and GR involvement in the environmental adaptation of the euryhaline medaka species.

PP-83

A novel dibasic residue repeat rich antimicrobial peptide from Pacific oyster, cgMolluscidin possess antibacterial and anticancer activity

Ji Young Moon[1], Eun-Hee Park[1], Jung-Kil Seo[3], Min Jeong Lee[2], Young-Ok Kim[1], Dong-Gyun Kim[1], Nam Gyu Park[2], Sang-Jun Lee[1], Chul Min An[1] and Bo-Hye Nam[1]

[1]Biotechnology Research Division, National Fisheries Research & Development Institute, Korea

[2] Department of Biotechnology, Pukyong National University, Nam-Gu, Busan, 608-737, Korea

[3] Department of food science and biotechnology, Kunsan National University, Gunsan 573-701, Korea

A 5.5 kDa antimicrobial peptide consisting of 55 amino acids, cgMolluscidin, was purified from the acidified gill extract of the Pacific oyster, *Crassostrea gigas*, by ion-exchange and C18 reversed-phase high performance liquid chromatography. By comparing the N-terminal amino acid sequences and the molecular weight of this peptide with those of other known antimicrobial peptides, it has been revealed that this peptide had no homology with any known peptides. cgMolluscidin showed potent antimicrobial activity against both Gram-positive bacteria, including *Bacillus subtilis*, *Micrococcus luteus*, and *Staphylococcus aureus* (minimal effective concentrations [MECs]; 1.3~31.3 mg/mL), and Gram-negative bacteria, including *Escherichia coli*, *Salmonella enterica*, and *Vibrio parahaemolyticus* ([MECs]; 0.4~2.3 mg/mL), without hemolytic activity. However, cgMolluscidin did not show any significant activity against *Candida albicans*. Recombinant cgMolluscidin had specific inhibitory effects on the proliferation of several cancer cell lines (human cervical cancer HeLa, lung cancer A549, and embryonic kidney HEK293T cells) measured by MTS assay. The deduced amino acid sequence of the cgMolluscidin showed no hit in public protein databases, while the nucleotide sequence had a 99% homology (E value ¼ 0) with only the unknown ESTs sequenced by *C. gigas* EST project. Tissue distribution of the cgMolluscidin mRNA suggests that it is constitutively expressed as a mature form in a non-tissue-specific manner. The cgMolluscidin mRNA expression level was significantly up-regulated at 12 h (2.8-fold) post injection with *Vibrio sp*. This peptide is highly basic and contains several dibasic residue repeats including Lysine-Lysine or Lysine-Arginine in the sequence, but may not form an ordered structure. These results suggest that cgMolluscidin might be an oyster-specific novel antimicrobial and anticancer peptide.

PP-84

Antimicrobial histone H1-like protein from of olive flounder, *Paralichthys olivaceus* retain anticancer activity and antibacterial activity

Eun-Hee Park[1], Ji Young Moon[1], Jung-Kil Seo[3], Hye-Jin Go[2], Min Jeong Lee[2], Young-Ok Kim[1], Dong-Gyun Kim[1], Nam Gyu Park[2], Sang-Jun Lee[1], Chul Min An[1] and Bo-Hye Nam[1]

[1]Biotechnology Research Division, National Fisheries Research & Development Institute

[2]Department of Biotechnology, Pukyong National University, Nam-Gu, Busan, 608-737, Korea

[3]Department of food science and biotechnology, Kunsan National University, Gunsan 573-701, Korea

An approximately 21 kDa antimicrobial protein was purified from an acidified testis extract of olive flounder, *Paralichthys olivaceus*, by ion-exchange and C18 reversed-phase HPLC. A comparison of the N-terminal amino acid sequence with those of other known antimicrobial polypeptides revealed high homology between this antimicrobial protein and other histone H1 molecules; thus, it was designated flounder histone H1-like protein (fH1LP). fH1LP showed potent antimicrobial activity against Gram positive bacteria, including *Bacillus subtilis, Staphylococcus aureus, and Streptococcus iniae* (minimal effective concentrations [MECs], 2.8~30.0 mg/mL), Gram-negative bacteria, including *Aeromonas hydrophila, Escherichia coli D31, Vibrio parahaemolyticus* (MECs, 1.4~12.0 mg/mL), and *Candida albicans* (MEC, 2.0 mg/mL). Recombinant fH1LP had specific inhibitory effects on the proliferation of several cancer cell lines (human cervical cancer HeLa, lung cancer A549, and embryonic kidney HEK293T cells) measured by MTS assay. cDNA cloning and tissue distribution studies of fH1LP indicated that it is constitutively expressed in testis and ovary. The fH1LP expression level was significantly dependent on developmental stage, and decreased dramatically after hatching. However, lipopolysaccharide stimulation did not induce fH1LP mRNA in other immune organs, including the kidney and spleen. These results suggest that antimicrobial fH1LP possess anticancer activity and plays an important role in innate immunity in fish during reproduction, including mating, fertilization, and hatching.

PP-85

Effects of dietary supplementation of Barodon, an anionic alkali mineral complex, on growth performance, feed utilization, innate immunity and disease resistance in pacific white shrimp, *Litopenaeus vannamei*

Cho-Rong Lee[1] and Kyeong-Jun Lee[1]*

1Department of Marine Life Science, Jeju National University, Jeju 690-756, Korea

* kjlee@jejunu.ac.kr

Aquaculture has expanded during the past several decades, and this industry has a high density stocking strategy due to the pursuit of maximum productivity in limited culture systems. Intensive aquaculture triggers higher susceptibility to disease and significant losses in aquaculture. Therefore, protection of farmed fish from various diseases is a prerequisite for increasing production and further development of aquaculture. Meanwhile, prevention of fish disease through stimulation of the immune system is considered as a promising approach for sustainable aquaculture. Several immunostimulants have been examined in fish and shrimp including both synthetic chemicals and natural biological substances. Barodon, an anionic alkali mineral complex, has been identified as a potential immunstimulant in terrestrial animals, such as pigs and horses. However, to the best of our knowledge there is no available information on its beneficial effects in pacific white shrimp. Therefore, this study was conducted to investigate the supplemental effects of Barodon on growth performance, innate immunity and disease resistance against *vibrio harveyi* for pacific white shrimp.

A basal experimental diet (38% crude protein, 19 MJ/kg gross energy) was prepared and regarded as a control and supplemented with 0.05, 0.1, 0.2, and 0.4% Barodon (designated as, Control, 0.5X, 1X, 2X and 4X, respectively). Quadruplicate groups of shrimp (initial body weight, 3.98 g) were fed one of the experimental diets to apparent satiation for 6 weeks. At the end of the feeding trial each challenge test employed 10 shrimp that were injected intramuscularly in the third abdominal segment with *Vibrio harveyi*.

Results of the present study showed the significant improvement of shrimp growth performance and feed utilization efficiency by dietary supplementation of Barodon at dietary inclusion level of 0.2 or higher. Also, the innate immune response of shrimp was upregulated by Barodon in this study, and significantly higher total haemocyte count, phenoloxidase, lysozyme and glutathione peroxidase activities were found by dietary inclusion levels of greater than 0.05% compare to those of the control group. The groups of fish offered 2X diet exhibited significantly higher disease resistance against *V. harveyi* compared with fish fed the control diet.

In conclusion, the findings in this study indicate that inclusion of Barodon in diets can positively affect growth performance, feed utilization, innate immunity, and disease resistance of pacific white shrimp. Accordingly, 0.2% seems to be the optimum recommended level of dietary inclusion of Barodon in the white shrimp feed.

PP-86

Vitamin C replacement by citrus by-product in diets for olive flounder (*Paralichthys olivaceus*)

You-Jeong Kim and Kyeong-Jun Lee*
Department of Marine Life Sciences, Jeju National University, Jeju 690-756, Korea
*kjlee@jejunu.ac.kr

Most teleost cannot synthesize vitamin C (L-ascorbic acid, AA) due to the lack of L-gulonolactone oxidase which is the key enzyme for AA synthesis. Thus, an exogenous source of AA is required in fish diets. AA is also known to improve immunity of fish even though its exact mechanism has not been demonstrated.

Six experimental diets were formulated using different sources of AA. Synthetic L-ascorbyl-2-polyphosphate (LAPP) at two levels of 30 and 150 mg/kg diet was used as control and it was replaced by either dry and wet CBP (designated as LAPP30, LAPP150, dry CBP30, dry CBP 150, wet CBP30, wet CBP150). Triplicate groups of juvenile olive flounder (24.5±0.09 g) were fed one of the test diets to apparent satiation for 8 weeks. At the end of the feeding trial all the fish in each tank were bulk-weighed and counted for calculation of growth and survival. Blood samples were taken from 3 fish per tank for analysis of innate immunity parameters.

Fish growth performance and feed utilization were not significantly affected by dietary treatments. Also, the examined immune parameters including total immunoglobulin level and activities of myeloperoxidase, superoxide dismutase and lysozyme were not significantly influenced by dietary treatments. The findings in this study showed that synthetic AA can be successfully replaced by either dry and wet CBP in diets for olive flounder without any adrerss effects on growth and innate immunity.

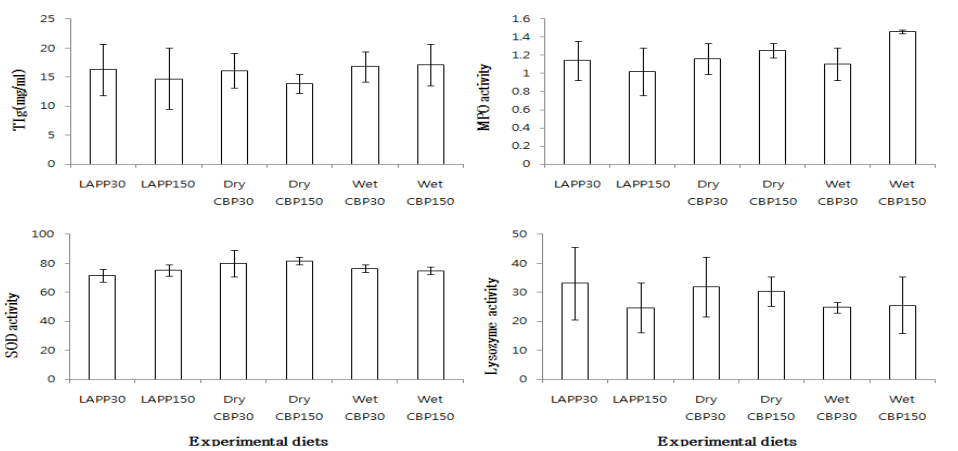

Figure 1. Total immunoglobulin (TIg), myeloperoxidase (MPO), superoxide dismutase (SOD), lysozyme activities of olive flounder fed the six experimetal diets for 6weeks. Values are means±SD. Bars with different letters are significanlty different ($P < 0.05$) after Student *t*-test.

PP-87

Optimal Feeding Rate Immature Korean Rockfish *Sebastes schlegeli* Fed Commercial Diet at High Water Temperature

Min-Gi Kim[1] and Kyeong-Jun Lee[1]*

[1]Department of Marine Life Sciences, Jeju National University, Jeju 690-756, Korea

*kjlee@jejunu.ac.kr

To gain the best results from any fish culture, it is essential to plan ahead carefully. The determination of the optimal feeding schedule of fish is needed for their efficient production, because their nutrient requirements are largely influenced by feed allowance. This study was conducted to investigate the effects of feeding rate on growth performance of immature Korean rockfish *Sebastes schlegeli*. Three replicate groups of 33 fish (initial mean weight 85.7±0.3 g) and were fed a commercial diet at five different daily feeding rates 0.4%, 0.8%, 1.2%, 1.6% and 2.0% of body weight (BW). At the and of 12 weeks of feeding trial the group fed 0.4% of showed significantly lower weight gain (WG) and specific growth rate (SGR). Also, The fish fed at the rate of 2.0% BW showed significantly lower feed conversion ratio (FCR) and higher protein efficiency ratio (PER) than those offered 0.4% BW. A broken-line regression analysis based on weight gain suggested that the optimum daily feeding rate for immature Korean rockfish is 1.17% BW/day

	Diets				
	0.4%	0.8%	1.2%	1.6%	2.0%
Initial body weight (g)	85.9±0.5	85.7±0.9	86.1±0.3	85.6±0.3	85.4±0.2
Final body weight (g)	95.5±1.9	112±2.6	112±1.5	116±4.3	113±3.8
Weight gain (%)	14.7±2.7[a]	31.2±4.3[b]	30.6±2.0[b]	35.1±4.4[b]	32.6±4.3[b]
Specific growth rate (%)	0.18±0.03[a]	0.35±0.04[b]	0.34±0.02[b]	0.39±0.04[b]	0.36±0.04[b]
Feed conversion ratio	1.27±0.2[a]	0.21±0.2[a]	1.63±0.1[ab]	1.66±0.2[ab]	2.22±0.1[b]
Protein efficiency ratio	1.68±0.3[a]	1.75±0.3[a]	1.29±0.1[ab]	1.27±0.2[ab]	0.95±0.1[b]
Feed intake (g/fish)	15.8±0.6[a]	32.0±2.9[b]	43.0±1.4[bc]	49.5±0.7[c]	61.8±9.3[d]
Survival (%)	93.8±0.0	90.6±3.1	89.6±1.8	83.3±1.8	76.0±17.2

PP-88

Application of procured live-feed for Korean eel, *Anguilla japonica* pre-leptocephalus larvae

O-Nam Kwon[1], Jin-Chul Park[2] and Heum-Gi Park[2]*

[1]Marine Biology Center for Research and Education, Gangneung-Wonju National University

[2]Department of Marine Bioscience, Gangneung-Wonju National University

We confirmed to group feeing rate and larvae survival due to feeding supplied some live-feed to eel of larvae (7.1±0.1 mm) hatched before 8 days. The prepared live feed were marine rotifer, *Brachionus rotundiforms* female (SWR) and male (non-lorica, MAL), freshwater rotifer, *B. calyciflorus* (FWR), small rotifer, *Keratella* sp. (KER), nauplii of benthic copepod, *Tigriopus japonicus* (COP) and flagellate, *Tetraselmis suecica* (TET). Also positive and negative controls were slurry type artificial diet (SLR) and non-feeding (NON), respectively.

In the results, group feeding rate showed the highest to 92% in TET trial as phytoplankton than that of others trials. Whereas, in the animal live-feed, SWR and SLR trials were significant higher values to 35% and 46% than that of others animal live-feed. While others trials showed lower group feeding rate to 1-12%. But survival showed no significant difference in all trials ($P < 0.05$).

Therefore, the marine rotifers were preferred to the eel larvae hatched before 8 days. Future studies will be focused on the digestion and nutritional absorption as well as on the survival and growth of eel larvae with *Brachionus* spp. to evaluate the usability of this zooplankton species as the first food source in eel larviculture.

PP-89

Effects of water temperature on the physiological responses and hematological characteristics in growing of red spotted grouper, *Epinephelus akaara*

Hyun Chul Cho[1]*, Ji Eun Kim[1], Hea Ja Baek[1],

[1]Department of Marine Biology, Pukyong National University, Busan, Korea, 608-737, Busan, Korea

Under culture conditions, water temperature changes affect growth, reproduction, metabolism, immune ability in fish and sudden water temperature changes that exceed the threshold value often cause deaths of fish (Ackerman et al., 2000, Chatterjee et al., 2004, Cheng et al., 2013). The red spotted grouper, *Epinephelus akaara*, is a serranid fish distributed mainly in southern Japan, Korea, China and economically important species in aquaculture industry. Broodstock management and larval rearing techniques of red spotted grouper have been studied for aquaculture of this species. In spite of considerable technical efforts, larval survival rates remain low and unstable under artificial conditions (Okumura et al., 2002). This study was conducted to test the physiological and hematological responses of red spotted grouper to exposure water temperature. Red spotted groupers (mean body weight, 79.5±4.98 g and 18.6±0.3 cm) from a private farm in Muan, Korea, were shipped to the laboratory and acclimated in tanks containing 34.0±0.5‰ seawater at water temperature of 15.0±1.0°C for 3 weeks. Fish were then divided into three groups and released into glass aquaria (60×40×40cm). The water temperature of the rearing facility was increased from 15°C to 25°C stepwise at rate of 1°C h^{-1} and kept at 15, 20 and 25°C for 7 days. 2 days and 7 days after the water temperature exposure, operculum movement number (OMN) was checked and hemoglobin (Hb), hematocrit (Ht), glutamic oxalate transaminase (GOT), glutamic pyruvate transaminase (GPT), glucose and cortisol levels in blood or plasma were measured for hematological and physiological responses. During the acclimation period, the fish were fed artificial feed every day, but were not fed 24 h prior to the experiment. The initial of OMN was 29.90 No./min. OMN of fish exposed to 15°C continued to increase from 2 days to 7 days (37.47 and 60.73 No./min). OMN of fish exposed to 20°C and 25°C increased at 2 days (49.87 and 57.13 No./min) and decreased at 7 days (39.47 and 35.75 No./min). Ht and Hb in blood of fish were 21.00 % and 3.05 g/dl when the water temperature was not treated. Ht and Hb in blood of fish exposed to 15, 20, 25°C were 28.33, 23.33, 19.50 % and 4.90, 3.97, 2.93 g/dl, respectively. These results showed similarity with OMN of fish at 7 days. At the beginning of experiment, the glucose level in plasma was 109.50 mg/dl. After the water temperature exposure for 7 days, the glucose levels of fish kept at 15, 20 and 25°C were 164.33, 123.00 and 82.88 mg/dl. It is considered that exposure to low temperature (15°C) affects increasing in glucose level and decreasing immunity of red spotted grouper.

PP-90

Functional analysis of Pacific oyster (*Crassostrea gigas*) thymosin: focus on antimicrobial activity

Bo-Hye Nam[1]*, Eun-Hee Park, Young-Ok Kim[1], Dong-Gyun Kim[1], Young Ju Jee[1], Cheul Min An[1], Jung-Kil Seo[2] and Nam Gyu Park[3]

[1]Biotechnology Research Division, National Fisheries Research and Development Institute

[2]Department of Food Science and Biotechnology, Kunsan National University

[3]Department Biotechnology, Pukyong National University

In comparison to the vast amount of information that is present for $T\beta_4$ in vertebrates, the knowledge of thymosin like proteins from invertebrates is fairly limited. In this work we have isolated and purified an approximately 5 kDa antimicrobial peptide from mantle of Pacific oyster, *Crassostrea gigas*, by ion-exchange and C18 reversed-phase HPLC. A comparison of the N-terminal amino acid sequence of oyster antimicrobial peptide with deduced amino acid sequences in our local EST database of *C. gigas* (unpublished) revealed that oyster antimicrobial peptide sequence entirely matched with a deduced amino acid sequence of EST clone (HM-8_A04) which have high homology with other species' thymosin β4 ($T\beta_4$). Tissue distribution of cgTβ4 mRNA expression level was significantly high in mantle tissue, and was up-regulated by pathogen infection. Furthermore, we produced a recombinant $T\beta_4$ (rcgTβ4) using the expression plasmid pET32 and examined its bioactivity against several pathogens (*E. coli, B. cereus, and C. albicans*) in liquid culture. The results of growth inhibition clearly showed that the rcgTβ4 have an antimicrobial activity. The investigation of cgTβ4 antimicrobial activity could aid our understanding of the biological role of this gene and mollusk immunology.

PP-91

Effect of carbon dioxide and temperature on oxygen consumption of red seabream *Pagrus major*

Sung-Yong Oh[1,2]* and Dongsung Kim[3]

[1]Marine Ecosystem Research Division, Korea Institute of Ocean Science and Technology, Ansan P.O. Box 29, Seoul 425-600, Korea

[2]Department of Marine Biology, Korea University of Science and Technology, Daejeon, Korea

[3]East Sea Branch, Korea Institute of Ocean Science and Technology, Gyeongbuk, Korea

◎ Background and Purpose: The development of marine recirculating aquaculture system (RAS) provoked tremendous high culture density which resulted in high CO_2 concentrations in water over 10 times encountered in the sea due to the fish respiration and biological oxidation of organic compounds in the system (Moran and Støttrup, 2011). Carbon dioxide is highly soluble in water, which leads to the formation of carbonic acid (H_2CO_3), therefore, increasing the concentration of dissolved CO_2 could decrease the water pH level. It has been demonstrated that marine fish have some stress at acidified water by CO_2 (Kikkawa et al., 2004). The accumulation of CO_2 in RAS can make a significant impact on fish health and growth (Moran and Støttrup, 2011). For instance, acidification through the formation of H_2CO_3 can induce to decreasing blood oxygen carrying capacity (Gallaugher and Farrell 1998) and to lowering brain pH (Yoshikawa et al. 1994). In addition, chronic hypercapnia is provoked to reduce growth rates, feed intake and feed efficiencies in Atlantic salmon (*Salmo salar* L.) (Fivelstad et al. 1998). Temperature is main factor controlling the metabolic rate of fish, and directly affect to the solubility of carbon dioxide. Therefore, experiments which aim to compare the effects of carbon dioxide at different temperature should be performed. Oxygen consumption is a widely used indicator of metabolic rate in fish. The measurement of oxygen consumption in aquatic organisms is a valid method to assess the effect of environmental changes such as carbon and temperature; that allows the estimation of the energy costs associated with the physiological stress on organisms (Shi et al. 2011). Red seabream (*Pagrus major*) is one of the most popular and economically important fish for marine aquaculture in Korea and Japan because of its high market value and meat quality. But, only little attention has been paid to evaluate its environmental stress response. Furthermore, there are no studies on the metabolic effect of water CO_2 concentration and temperature in *P. major*. Therefore, in this study, we investigated the difference of oxygen consumption in juvenile *P. major* subjected to various CO_2 concentrations and temperatures.

◎ Materials and methods: Juveniles red seabream were obtained from the Tongyeong Marine Living Resources Research & Conservation Center. Fish were transferred to 3 pilot-scaled recirculating systems controlled 15, 20 and 25°C, respectively, and acclimated for 4 weeks under each temperature condition before the experiment started. The effect of carbon dioxide and

temperature on oxygen consumption of *P. major* (146.4 ± 22.6 g mean body weight) were investigated under combinations of four concentrations (500, 750, 1000 and 1500 mg/L) and three temperatures (15, 20 and 25°C). The oxygen consumption rates (OCRs) were measured in triplicate with an interval for 24 hr in each experimental condition at modified Oh and Noh (2006) system. Data associated with OCRs were subjected to two-way ANOVA followed by a Tukey's multiple range test ($P<0.05$) with a 95% significance level to compare the means when differences occurred.

◎ Results and discussion: The OCR was significantly affected by temperature ($P=0.000$), CO_2 concentration ($P=0.000$) and the interaction ($P=0.002$) of these two variables. The OCR increased significantly with an increase in the temperature range from 15 to 25°C for all CO_2 concentration conditions. Mean OCRs at 15, 20 and 25°C ranged 76.9~106.4, 83.4~117.6 and 123.6~156.4 mg O_2 kg^{-1} hr^{-1}, respectively. Q_{10} values ranged 1.15~2.15 between 15 and 20°C, 1.36~2.20 between 20 and 25°C, and 1.47~1.71 between 15 and 25°C, respectively. The OCR relation to CO_2 concentration had a unimodal response independent on temperature. The OCR at 750 mg/L of CO_2 was highest among all CO_2 concentrations for all temperature conditions. The results of this study provide physiological evidence that *P. major* exposed to various CO_2 concentrations and temperatures have significant metabolic response. This result is useful for application of culture management such as water pH level and aeration for optimum growth of *P. major.*

◎ Acknowledgement: Funding was provided by the Korea Institute of Ocean Science and Technology through project PE99202.

◎ References

Fivelstad S, Haavik H, LØvik G, Olsen AB (1998) Sublethal effects and safe levels of carbon dioxide in seawater for Atlantic salmon postsmolts (*Salmo salar* L.): ion regulation and growth. Aquaculture 160:305-316.

Gallaugher P, Farrell AP (1998) Hematocrit and blood oxygen-carrying capacity. In: Perry SF, Tufts B (Eds), Fish Respiration. Academic Press, San Diego, pp. 185-227.

Kikkawa T, Kita J, Ishimatsu A (2004) Comparison of the lethal effect of CO2 and acidification on red sea bream (*Pagrus major*) during the early developmental stages. Marine Pollution Bulletin 48:108-110.

Moran D, StØttrup JG (2011) The effect of carbon dioxide on growth of juvenile Atlantic cod *Gadus morhua* L. Aquatic Toxicology 102:24-30.

Oh S-Y, Noh CH (2006) Effects of water temperature and photoperiod on the oxygen consumption rate of juvenile dark-banded rockfish, *Sebastes inermis*. J Aquacul 19:210-215.

Shi Y, Zhang G, Liu J, Zang W (2011) Effects of temperature and salinity on oxygen consumption of tawny puffer *Takifugu flavidus* juvenile. Aquac Res 42:301-307.

Yoshikawa H, Kawai F, Kanamori M (1994) The relationship between the EEG and brain pH in carp, Cyprinus capio, subjected to environmental hypercapnia at an anesthetic level. Comparative Biochemistry and Physiology A 107:307-312.

PP-92

Effect of salinity on survival, oxygen consumption and hematological response of greenling *Hexagrammos otakii*

Sung-Yong Oh[1,2]*

[1]Marine Ecosystem Research Division, Korea Institute of Ocean Science and Technology, Ansan P.O. Box 29, Seoul 425-600, Korea

[2]Department of Marine Biology, Korea University of Science and Technology, Daejeon, Korea

◎ Background and purpose: The change of coastal environmental salinity by heavy rainfall or typhoon may impact the physiological conditions of marine teleost species in various different ways and mechanisms, but understanding of this is currently limited (Árnason et al. 2013). Salinity is one of the main factors that determine the life and distribution of aquatic organisms; that have direct effects on the physiological responses of the marine organisms. Oxygen consumption is one of the physiological responses that correlated with environmental change, because it is related to the metabolic activity and energy flow that organisms have to sustain the homeostatic control of mechanisms (Salvato et al. 2001). The measurement of oxygen consumption in aquatic organisms is a valid method to assess the effect of environmental changes such as salinity; that allows the estimation of the energy costs associated with the physiological stress on organisms (Shi et al. 2011). On the other hand, changes in environmental salinity approaching the physiological tolerance limits of the marine fish are seem to act as a stressor, lead to changes in various hematological variables (Árnason et al. 2013). The greenling *Hexagrammos otakii* (Scorpaeniformes: Hexagrammidae) is a representative species along distributed all coastal ecosystems in Korea, which can easily be affected by environmental salinity change. Therefore, the purpose of this study was to determine the effect of salinity on survival, oxygen consumption and hematological response of greenling to assess the physiological response to tolerate salinity changes. These results will provide important information on evidence of distribution change and management of stock for this species.

◎ Materials and methods: Greenlings were obtained from the Tongyeong Marine Living Resources Research & Conservation Center. Fish were transferred to a recirculating system and acclimated for 1 month before the experiment started. The effect of salinity on survival, oxygen consumption and hematological responses of *H. otakii* (147.1 ± 3.8 g mean initial body weight) were investigated at nine different salinities of 33.4 (control), 33.1, 32.8, 32.2, 31.0, 28.7, 23.9, 14.5 and 3.8 psu, respectively. Survival and hematological response trials were separately conducted in 3 rectangular plastic aquariums (40 × 60 × 40 cm, 75L) in a recirculating system with 5 fish per each aquarium, respectively. Survival rate was measured every day for 96 hr at each salinity condition. After 24-hr exposure to each experimental salinity, hematological variables were analyzed. Oxygen

consumption rate (OCR) was determined at stepwise salinity exposure (33.4→33.1→32.8→32.2→31.0→28.7→23.9→14.5→3.8 psu) with an interval of 24 hr for each salinity at modified Oh and Noh (2006) system. OCRs were measured in triplicate with an interval of 10 seconds for 6 hr just before salinity change. All fish in each trial were fasted for a day to evacuate their gut and then were anesthetized with 2-phenooxyethanol (Sigma, St. Louis, MO, USA) at 150 mg/L to reduce stress prior to weight measurements. Data associated with OCR and hematological variables were subjected to one-way ANOVA followed by a Duncan's multiple range test ($P<0.05$) with a 95% significance level to compare the means when differences occurred.

◎ Results and discussion: The mortality of fish was not found in the range of 33.4 to 14.5 psu, but survival rate was reduced to 50.0% at 3.8 psu after exposure for 96 hr. The mean OCRs of 33.4, 33.1, 32.8, 32.2, 31.0, 28.7, 23.9, 14.5 and 3.8 psu were 281.4, 279.8, 279.6, 279.0, 280.0, 279.6, 387.8, 334.4 and 99.8 mg kg $fish^{-1}$ hr^{-1}, respectively. The OCRs were not significantly different in the range 33.4 to 28.7 psu ($P>0.05$), but significantly increased at 23.9 and 14.5 psu, and then suddenly decreased at 3.8 psu compared to control ($P<0.05$). The change of salinity in fish did not affect the hematological variables such as hemoglobin, glucose, GOT (glutamic oxaloacetic transaminase), K^+ and Cl^- compared to control. The concentrations of GPT (glutamic pyruvic transaminase) in fish exposed in the range of 28.7 to 3.8 psu were significantly lower than that of control fish ($P<0.05$). The concentrations of glucose and hematocrit in fish exposed at 14.5 and 3.8 psu were significantly lower than those of control fish ($P<0.05$). The concentrations of plasma Na^+ were significantly lower in fish exposed at 3.8 psu compared to control ($P<0.05$). The results of this study provide evidence that *H. otakii* exposed to below 28.7 psu have significant physiological response to tolerate salinity changes.

◎ Acknowledgement: Funding was provided by the Korea Institute of Ocean Science and Technology through project PO01110 and PE99202.

◎ References

Árnason T, Magnadóttir B, Björnsson B, Steinarsson A, Björnsson BT (2013) Effects of salinity and temperature on growth, plasma ions, cortisol and immune parameters of juvenile Atlantic cod (*Gadus morhua*). Aquaculture 380-383:70-79.

Oh S-Y, Noh CH (2006) Effects of water temperature and photoperiod on the oxygen consumption rate of juvenile dark-banded rockfish, *Sebastes inermis*. J Aquacul 19:210-215.

Salvato B, Cuomo V, Di Muro R, Beltramini M (2001) Effects of environmental parameters on the oxygen consumption of four marine invertebrates: a comparative factorial study. Mar Biol 138: 659-668.

Shi Y, Zhang G, Liu J, Zang W (2011) Effects of temperature and salinity on oxygen consumption of tawny puffer *Takifugu flavidus* juvenile. Aquac Res 42:301-307.

PP-93

Effect of feeding frequency on growth, feed consumption and blood physiology of Korean rockfish *Sebastes schlegelii* in sea cage

Sung-Yong Oh[1,2]* and Min-Suk Kim[1]

[1]Marine Ecosystem Research Division, Korea Institute of Ocean Science and Technology, Ansan P.O. Box 29, Seoul 425-600, Korea

[2]Department of Marine Biology, Korea University of Science and Technology, Daejeon, Korea

◎ Background and Purpose: Satiation feeding is a common technique used by fish farmers. It is adopted by farmers' mainly without properly measuring weight gain and feed efficiency. Since, it is not easy to determine the satiation point, fish are commonly overfed. This could lead to an increase in production cost and poor water quality. Conversely, if fish are fed insufficiently, their growth is reduced and size variation is enhanced. Therefore, for successful fish culture, some economical feeding regimes need to be developed to save feeding costs without causing growth retardation and profit reduction. Growth of fish is largely affected by various factors such as feeding frequency, ration size, feed consumption, feed type and feeding interval as well its of nutrients utilization efficiencies (Küçük et al. 2013). Among these, feeding frequency is one of the most important parameters influencing growth, feed efficiency, feed intake and food waste of fish in practice of aquaculture activity. It is, therefore, important to determine the optimal feeding frequency in order to obtain improved fish production, to produce fish of uniform sizes, to minimize water pollution, and to optimize economical benefit. The influence of feeding frequency on fish growth is depending on experimental species, size, feed composition, rearing conditions and other factors (Xie *et al*. 2011). Such inconsistency suggests that the effect of feeding frequency on fish growth should be analyzed in detail before practical suggestions are made for the daily practice. Korean rockfish *Sebastes schlegelii* is one of the most popular and commercially important marine aquaculture fish species in Korea. The hatchery-reared juveniles are commonly cultured in sea cages, especially in the southern part of Korea until their growth up to market size. The optimal feeding frequency on growth of *S. schlegelii* was reported one meal a day weighing from 6 to 20 g (Lee et al. 2000) and one meal every 2 days weighing from 25 to 60 g (Lee et al. 1996) in laboratory trials. However, information on effect of feeding frequency in field trials with 100-200 g of *S. schlegelii*, where natural condition also contributes, is almost non-existent, and gives to fish farmer practical application. The purpose of this study was to investigate the effects of feeding frequency on growth, feed consumption and blood physiology of *S. schlegelii* in sea cage with field condition.

◎ Materials and methods: A total 1200 fish [initial mean body weight: 117.7±4.7 g (mean±SE)] were divided into 4 groups, and each group was randomly assigned to one of four different feeding frequencies: one meal every 2 days at 08:30, one meal daily at 09:00, two meals daily at 09:00 and

16:00, three meals daily at 09:00, 12:30 and 16:00, respectively. Each feeding frequency group consisted of 3 replicates with 100 fish per cage (2.0 m × 3.0 m × 2.0 m). During the experimental period (77 days), fish in all feeding treatment groups were fed by hand on commercial dry pellets (Aller Aqua Co.,Christiansfeld, Denmark: 11.4% moisture, 42.5% crude protein, 9.4% crude lipid, 8.0% ash, and 21.2 kJ/g energy) to apparent satiation. At the end of experiment, blood parameters were analyzed for 10 fish of each cage. During the experimental period, temperature, salinity and dissolved oxygen ranged from 14.2 to 26.5°C, 29.8 to 34.4 psu and 5.8 to 11.2 mg/L, respectively.

◎ Results and discussion: The results clearly indicate that final body weight, weight gain, specific growth rate and feed efficiency of fish fed one to two meals per day were significantly ($P<0.05$) higher than those of fish fed one meal every 2 days and three meals per day. The feed intake of fish fed one meal every 2 days was significantly ($P<0.05$) lower than those of fish fed one to three meals per day. The inter-individual size variation in weight was not significantly ($P>0.05$) affected by feeding frequency. The maximum feed intake of fish appeared at the first meal and last meal of each treatment but the magnitude of consumed feeds changed with feeding frequency. The concentration of hematocrit, GOT (glutamic oxaloacetic transaminase) and GPT (glutamic pyruvic transaminase) were not significantly ($P>0.05$) affected by feeding frequency. The glucose concentration of fish fed one meal every 2 days was significantly ($P<0.05$) higher than those of fish fed one to three meals per day. The concentrations of TCHO (total cholesterol) and HDLC (high density of lipoprotein cholesterol) of fish fed one and two meals per day were significantly ($P<0.05$) higher than those of fish fed one meal every 2 days and three meals per day. We conclude that the optimum feeding frequency aimed at optimized growth of Korean rock bream weighing from 100 to 200 g reared in sea cages is two meals per day under our experimental conditions including particular diet and temperature.

◎ Acknowledgement: We thank Tongyeong Marine Living Resources Research & Conservation Center colleagues for their generous assistance in the field. Funding was provided by the Korea Institute of Ocean Science and Technology through project PO01110 and PE99202.

◎ References

Küçük E, Aydin İ, Polat H, Eroldoğan OT, Şahin T (2013) Effect of feeding frequency on growth, feed efficiency and nutrient utilization of juvenile flounder (*Platichthys flesus luscus*). Aquacult Int 22:723-732.

Lee S-M, Kim SH, Jeon IG, Kim SM, Chang YJ (2006) Effects of feeding frequency on growth, feed efficiency and body composition of juvenile Korean rockfish (*Sebastes schlegelii*). J Aquacult 9:385-394, in Korean with English abstract.

Lee S-M, Hwang UG, Cho SH (2000b) Effects of feeding frequency and dietary moisture content on growth, body composition and gastric evacuation of juvenile Korean rockfish (*Sebastes schlegeli*). Aquaculture 187:399-409

Xie F, Ai Q, Mai K, Xu W, Ma H (2011) The optimal feeding frequency of large yellow croaker (*Pseudosciaena croeca*, Richardson) larvae. Aquaculture 311:162-167.

PP-94

Research for anti-HIV activity of AMD3100 analogue

In-Seung Jang, Seung-Hyun Jung and Sun-Joo Park
Dept. of Chemistry, Pukyong National University, Busan 608-737, Korea

Complete cure for AIDS has not been developed yet. However, in the case of AMD3100 for the anti HIV effect of being recognized as a treatment approved by the FDA used. AMD3100 is attached to CXCR4 of immune cell. In result, AMD3100 block the interaction between gp120 and CXCR4. The aim of this research is to confirm anti-HIV activity of AMD3100 analogue. Cytotoxicity of AMD3100 analogue was assayed using MTT assay in the CEM-GFP and MT-4 cell line. The activity of HIV-1 reverse transcriptase in the viral lysate was evaluated using a fluorescence RT assay. In order to determine the amount of virus released to the medium, HIV-1 p25 antigen capture ELISA was carried out with a commercial kit.

PP-95

Inhibitory effect of dieckol on hypoxia-induced epithelial-to-mesenchymal transition of human colorectal cancer cell HT29

Seung-Hyun Jung, In-Seung Jang and Sun-Joo Park
Dept. of Chemistry, Pukyong National University, Busan 608-737, Korea

Hypoxia is an essential signal for tumor progression and metastasis. Upon hypoxia, epithelial cells acquire to mesenchymal features, known as epithelial-to-mesenchymal transition (EMT). Therefore, hypoxia-induced EMT of tumor cells become an attractive therapeutic target for cancer therapy. Here we examined the effect of anti-oxidant dieckol on hypoxia-induced EMT of human colorectal cancer cell HT29. HT29 cells treated with the hypoxic mimetic agent, CoCl2, exhibited some morphological changes including loss of cell-cell contact and cell elongation. Moreover, expression of the epithelia-specific marker E-cadherin was decreased and expression of the mesenchymal-specific marker vimentin was increased. The hypoxia-induced EMT of HT29 cells was blocked by anti-oxidant dieckol treatment or by depletion of hypoxia-inducible factor1, HIF1a. Therefore, this finding suggests that anti-oxidant dieckol inhibits hypoxia-induced EMT of HT29 cells downstream of HIF1a signaling pathway.

PP-96

The recurrent and localized blooms of harmful dinoflagellate *Cochlodinium polykrikoides* in the southeast coastal waters of Korea

Roksana Jahan[1], Song Ji Hyo[3], Kim Min Jung[2], Chang Hoon Kim[1,2,3]*

[1]Fisheries Science and Technology Centre

[2]Interdisciplinary Program of Biomedical Engineering

[3]Department of Marine Bio-materials & Aquaculture, Pukyong National University, Busan 606-737, Korea

*chkpknu@hanmail.net

The large endemic outbreaks of *Cochlodinium polykrikoides* in Korean coastal waters are common phenomena and many sophisticated oceanographic studies had been conducted during last two decades but all of the studies particularly focused on offshore blooming events. The purpose of the present research were to consider some regional factors (i.e. resting cysts, seed beds, etc) might have great contribution on on-shore (i.e. Jaran Bay) blooming patterns, and to draw distinct blooming mechanism between on-shore and off-shore (i.e Mijo and Yeokji Bay). We fist confirmed the existence of resting cyst that created local seed-beds responsible for recurrent blooming. The successful germination of resting and hyaline cyst had been observed in July –August and created blooms under favorable environmental conditions (i.e. temperature, salinity, etc.). The low resting cyst production also controlled the intensity of blooming pattern and responsible for less production of *C. polykrikoides* in Jaran Bay, although some unfavorable conditions had been detected during August 2011. In addition, the high abundances of *Nematodinium* cysts was also shown in water bodies where blooms occurred last year and that regions take the role of point sources of recurrent bloom initiation. Nevertheless, the off-shore blooming mechanisms are largely depending on physical oceanographic factors. Tsushima Warm current, for example, is supposed to bring vegetative *C. polykrikoides* cells and created a bloom. For understanding the role of endogenous seed-bed on offshore and entire blooming scenarios, the further research on life cycles and seed maps of *C. polykrikoides* are needed.

PP-97

Resting cyst and life cycles of *Cochlodinium polykrikoides* in Korean Coastal waters

Roksana Jahan[1], Song Ji Hyo[3], Kim Min Jung[2] and Chang Hoon Kim[1,2,3]*

[1]Fisheries Science and Technology Centre

[2]Interdisciplinary Program of Biomedical Engineering

[3]Department of Marine Bio-materials & Aquaculture, Pukyong National University, Busan 606-737, Korea

*chkpknu@hanmail.net

The study of resting cysts of *Cochlodinium polykrikoides* has large ambiguities, though it has large importance on life cycle and ecology. To find out resting and temporal hyaline cyst of *C. polykrikoides*, we conducted survey in the surface and sediment in Korean coasts using real-time PCR and examined their germination processes under microscope. We first observed the resting cysts of *C. polykrikoides* in Jaran Bay from the end of May and early June 2009, and cyst production (>100 rDNA copies per gram) were largely depend on sites and seasons. The cyst size was 35-43 μm long, rounded shape with small spines as a cyst ornament and it had a conspicuous red body. The early germinant were 35-45 μm long and 20-30 μm wide, and their vegetative cells developed into 8 chains at the maximum. The morphology of resting cyst distinguished from the hyaline cyst that was surrounded by a transparent, thin hyaline membrane and similar to vegetative cells in size, pale in color and immobile without chloroplast. The confirm existence of resting and hyaline cyst put forward great contribution on life cycle of *C. polykrikoides* and also act as a local seed-bed responsible for recurrent blooming event in Korean southeastern coast.

PP-98

Defensive metabolite extraction in *Marphysa sanguinea* larvae

Jae-Gu Oh[2], Kyeong-Hun Kim[2], Jong-Soo Lee[3] and Chang-Hoon Kim[1,2,4*]

[1]Fisheries Science & Technology Centre

[2]Interdisciplinary Program of Biomedical Engineering, Pukyong National University

[3]Department of Seafood Science & Technology, Gyeongsang National University

[4]Department of Marine Bio-materials & Aquaculture, Pukyong National University, Busan 608-737, Korea

*chkpknu@hanmail.net

The most important obstacle is that the larvae of *Marphysa sanguinea* have been attracted by harmful organism during its mass seed production stage. The purpose of the study was to investigate defensive activities using different extraction composition at Fisheries Science & Technology Centre, Pukyong National University. Initially, approximately 2.5 million larvae were extracted with MeOH and, consequently, separated by 70%, 85% and 100% MeOH using the ODS-Q3 column (1×20 cm). The purified experiment had been conducted by using a chromatographed RPAQUEOUS column (1×25 cm, 40°C, 221 nm, 90% MeOH, 1 ml/min) through HPLC system. Moreover, the copepod activity tests were conducted at each fraction groups and chromatographed on a RPAQUEOUS column (1×25 cm, 40°C, 221 nm, 90% MeOH, 0.5 ml/min) by the HPLC system.

Control was set using sterile water for testing copepod activity. The movements of copepods were observed at every hour. It was shown that copepod lost its movement at 3P (first purified, 300 ppm) and 3P-S (secondary purified, 50 ppm) within an hour. The research on purification of pure substances and structural identification material processes are still ongoing. However, defensive metabolite in the larvae exterminates harmful organism and this activities will enhance the overall survival rate of larvae.

PP-99

A study of feed and feeding rate of *Marphysa sanguinea* juvenile during the early stage

Byung-Kwon Kim[2], Kyeong-Hun Kim[2], Sung-Kyun Kim[2], Ji-Il Kim[1] and Chang-Hoon Kim[1,2,3]*

[1]Fisheries Science & Technology Centre

[2]Interdisciplinary Program of Biomedical Engineering

[3]Department of Marine Bio-materials & Aquaculture, Pukyong National University, Busan 608-737, Korea

*chkpknu@hanmail.net

The purpose of the study was to investigate feed and feeding rate of early state juvenile of *Marphysa sanguinea* using different feeds such as shrimp feed, decapsulated *Artemia*, eel feed, attached diatoms and mixed microalgae. Firstly, the larvae were selected that had developed mandible, and showed highest growth and survival rate (100%). After seven consecutive days, the highest survival rate of juvenile *M. sanguinea* had been recorded at decapsulated *Artemia* feed, followed by eel feed, shrimp feed and so on. In contrast, the lowest survival rate was recorded at microalgal feed. Moreover, the decapsulated *Artemia* and shrimp feed had also been responsible for higher segmented juvenile (30±1) than other feed (21±1) during two months. In feeding rate experiment, 0.05 g (3000 ind.) trial was shown the highest survival rate than other traits (0.1 g/3000 ind.). On average, decapsulated *Artemia* and its optimum feeding rate (0.05 g/3000 ind.) had given higher survival and growth rate of juvenile of *M. sanguinea*.

PP-100

Growth and survival rate of polychaete *Marphysa sanguinea* larvae on different grain size of substrates

Sung-Kyun Kim[2], Kyeong-Hun Kim[2], Byung-Kwon Kim[2], Ji-Il Kim[1] and Chang-Hoon Kim[123]*

[1]Fisheries Science & Technology Centre

[2]Interdisciplinary Program of Biomedical Engineering

[3]Department of Marine Bio-materials & Aquaculture, Pukyong National University, Busan 608-737, Korea

chkpknu@hanmail.net

The lower productivity of *Marphysa sanguinea* had usually occurred in the early larval stage. The purpose of the study was to investigate growth and survival rate of *M. sanguinea* larvae by using different grain size of substrates. The experiment was conducted at 6 hole well plates at the Fisheries Science & Technology Centre, Pukyong National University. Each hole was filled with sterilized sea water and different grain size of substrates (A: <0.004 mm, B: 0.004-0.016 mm, C: 0.016-0.063 mm, D: 0.063-0.25 mm, E: 0.25-0.5 mm, F: 0.5-2.0 mm and G: control). Each hole was accommodated by 50 larvae. The whole experiment was maintained at constant temperature (22°C) under 12/12 h photoperiod conditions with 6 replications. It was observed that the higher length of larvae (>630 μm) had been gained at the relatively smaller grain size (<0.016 mm) substrates. In contrast, the lowest length (<552.7 μm) had been recorded at control. Moreover, the smaller grain size substrates might also responsible for higher survival rate (93.3%) and, consistently, the lower rate (<80%) had been recorded at larger substrates.

This result indicated that smaller grain size substrate (<0.016 mm) was suitable for making a stable inhabitation tube that favorable for growth and survival of *M. sanguinea* larvae. It is anticipated, therefore, that the smaller grain size substrate will enhance the productivity of *M. sanguinea* at the larval stages.

PP-101

Physio-Chemical Characteristics of Fecal Solids of Recirculating Aquaculture System for Renewal Feed Resource for Sea Cucumber

U-Cheol Jeong, Feng Jin, Ga-Hyun Kang, Jong-Kuk Choi, [1]Byong-dae Choi, and Seok-joong Kang*
Department of Marine Biology and Aquaculture, Gyeongsang National University, Tongyeong 650-160, Korea
[1]Department of Seafood Science and Technology, Gyeongshang National University, Tongyeong 650-160, Korea
* sjkang@gnu.ac.kr

The environmental pollution, caused by fecal solids from the recirculating aquaculture system (RAS), has been getting worse throughout the world. That is why it needs a fundamental solution in an urgent manner. As for this study, we have decided to look into the physio-chemical characteristics of fecal solids of the RAS for eels farming and rainbow trout farming, which are two most common fish farming in South Korea. From the RAS, located in Chungju, Chungcheongbuk-do, fecal solids of the eel farming and rainbow trout farming were collected. Then, for the physio-chemical characteristics analysis, the elemental analysis, amino acid analysis, and fatty acid composition analysis were implemented. In the elemental analysis, crude protein was analyzed with the method of Kjeldahl and crude lipid was extracted by the method of Bligh-Dyer (1959), using a solution made of Choloroform and Methanol in a ratio of 2:1, as stated in the AOAC (1995). The moisture content level was measured with the air oven method. Moreover, the amount of crude ash was measured after burning it in the furnace at the temperature of 600°C for four hours. The content of carbohydrate was calculated with the method developed by Choi et al.(1984). The amount of nitrogen free extract was calculated by subtracting the sum of the aforementioned ingredients from 100 (AOAC, 1995). Since the fecal solid was in a mash phase, it was shaken several times to evenly distribute deposits prior to sampling and then, it was converted to a dry phase for the experiment. In case of the fecal solids from the RAS for eel farming, its contents of protein, lipid, crude ash and moisture were found to be 10.9%, 1.2%, 85.8% and 72.2%, respectively and 20.5%, 3.2%, 70.9% and 87.0% for the fecal solids from the RAS for rainbow trout farming. Also, the fatty acid composition of the fecal solids from the RAS for eel farming was found to be in order of 16:0, 18:0, 18:1n-9, 16:1n-7 and 18:1n-7, and 16:0, 18:0, 14:0, 18:1n-9 and 22:5n-3 for the fecal solids from the RAS for rainbow trout farming.

PP-102

Absorption Rate of Organic Matter of Fecal Solids of Recirculating Aquaculture System Using the Sea Cucumber

U-Cheol Jeong, Feng Jin, Ga-Hyun Kang, Jong-Kuk Choi, [1]Byong-dae Choi, and Seok-joong Kang*
Department of Marine Biology and Aquaculture, Gyeongsang National University, Tongyeong 650-160, Korea
[1]Department of Seafood Science and Technology, Gyeongshang National University, Tongyeong 650-160, Korea
* sjkang@gnu.ac.kr

The sea cucumber feeds on detritus on the bottom of their habitat and its diet consists of organic matter found in the sea (Kang, 2012). This study aims to employ the sea cucumber for treating the fecal solids from the Recirculating Aquaculture System (RAS), which are considered to be the biggest challenge for the promotion the RAS. Thus, it is critical to confirm whether the sea cucumber is able to absorb organic matter from the fecal solids and utilizes them as nutrition. Therefore, in this study, the fecal solids from the RAS were fed to the sea cucumbers in order to investigat the absorption rate of organic matter of the sea cucumbers(*Apostichopus japonicas*), with the size of 6.0 ±2.6 cm. As for the feed of the experiment, fecal solids of the eels farming and rainbow trout farming were collected from the RAS, located in Chungju, Chungcheongbuk-do, and then dried with the thermostatic dryer (J-NDS-2, JISCO) at 65°C for 48 hours and then, crushed to the size of 2.5~5 μm by using the ball mill (SJB-250A, Dongwon Science). For the control group, the feed mixed with sea cucumber feed (DL, China) and the dried sea mud were used. For the experiment, 1)the eels fecal solid, 2)the rainbow trout fecal solid, 3)the mud, 4)the commercial feed 5)the mixture of the commercial feed and the mud in a ratio of 1:1 were fed to the sea cucumbers and then, the excreted feces of the sea cucumbers were collected and their organic materials absorption rates were measured. The result was that the organic materials absorption rate of the eel fecal solid was 1.3% and of the rainbow trout fecal solid was 1.4%. The organic matter absorption rates of the mud, the mixture of the commercial feed and the mud and the commercial feed were 1.6%, 7.6%, and 13.8%, respectively.

PP-103

Formation of Biofloc for Renewal Feed Resource for Sea Cucumber upon Concentration of Fecal Solids Released from RAS

Jong-Kuk Choi, U-Cheol Jeong, Feng Jin, Ga-Hyun Kang, [1]Byong-dae Choi, and Seok-joong Kang*
Department of Marine Biology and Aquaculture, Gyeongsang National University, Tongyeong 650-160, Korea
[1]Department of Seafood Science and Technology, Gyeongshang National University, Tongyeong 650-160, Korea
* sjkang@gnu.ac.kr

Biofloc has received tremendous attention as the next generation aquaculture method due to its eco-friendliness. In South Korea, the biofloc in aquaculture has been employed for shrimp, freshwater fish and marine fish, but there is almost no case of employing the rearing sea cucumber. As an effort for the renewal feed resource for sea cucumber by using the fecal solids released from the Recirculating Aquaculture System (RAS), this study aimed to use the fecal solids after converting them to the biofloc rather than using them directly as the feed. The water tank of 20 L was used and the temperature was 25°C and salt concentration was 33 psu. The test was conducted with the eels fecal solids upon the concentrations of 10 ppm, 50 ppm, 100 ppm, 500 ppm, 1,000 ppm, 5,000 ppm, 10,000 ppm, 15,000 ppm, 20,000 ppm, 25,000 ppm, and 30,000 ppm. Changes in the biofloc particles over water temperature, salt concentration, dissolved oxygen (DO) and pH were observed through the microscope. It was shown that the amount of precipitates in imhoff cone increased over time and the fecal solids. In case of DO, it was decreased from 8.2 mg/L to 1.0 mg/L after 9 hours, but after 21 hours, it was started to gradually increase and maintained its level at 7.0 or above except for 30,000 ppm. In case of the pH level, it was started from pH 8.2 and decreased to pH 7.0 after 9 hours and then, gradually increased and maintained its level at pH 8.4. When it was observed through the microscope, it was shown that the biofloc was started to form and protozoa started to appear after 72 hours. It was concluded that the proper concentration of the feed for the sea cucumber is 20,000 ppm.

PP-104

Growth of Sea Cucumber Fed Biofloc Made from Fecal Solid of RAS

U-Cheol Jeong, Feng Jin, Ga-Hyun Kang, Jong-Kuk Choi, [1]Byong-dae Choi, and Seok-joong Kang*
Department of Marine Biology and Aquaculture, Gyeongsang National University, Tongyeong 650-160, Korea
[1]Department of Seafood Science and Technology, Gyeongshang National University, Tongyeong 650-160, Korea
* sjkang@gnu.ac.kr

Biofloc has received tremendous attention as the next generation aquaculture method due to its eco-friendliness. In South Korea, the biofloc in aquaculture has been employed for shrimp, freshwater fish and marine fish, but there is almost no case of employing rearing sea cucumber. As an effort for the renewal feed resource for sea cucumber by using the fecal solids from the Recirculating Aquaculture System (RAS), this study aimed to use the fecal solids after converting them to the biofloc rather than using them directly as the feed. As for the feeds used for the formation of Biofloc, 1) the eels fecal solid, 2) the rainbow trout fecal solid and 3) the commercial feed were used. The initial dose was 20,000 ppm. The protein content was analyzed with the method of Kjeldahl (AOAC). The sea cucumber, used in the experiment, was 11.5 ±1.20 g. The supply amount of the biofloc was 3~5% of the total weight of sea cucumber (dry weight basis), and it was supplied once a day at 8 pm. In order to prevent the outflow of the biofloc, the inlet water was blocked and only air was supplied for 1 hour after the supply of the feed. The feces was collected everyday, by using a siphone, at 9 am. The experiment continued for a period of 30 days. The weight gained (WG) was calculated with the initial weight (W_i) and final weight (W_f). As a result, it was shown that the protein content for the eels fecal solid was changed from 10.9% to 5.3%, for the rainbow trout fecal solid was changed from 20.5 to 6.7%, and from 21.8% to 4.2% the commercial feed. After 1 month the sea cumber with the weight of 11.5 g was grown to 22.9 g and the survival rate was 100%.

PP-105

Developing molecular markers from comparative mitogenomics of economic red algae *Pyropia* species

Sang-Rae Lee[1]*, Jee Eun Lee[1], Mi Sook Hwang[2,3], Seung-Oh Kim[2] and Dong-Soo Ha[2]

[1]Marine Research Institute, Pusan National University, Korea

[2]Aquatic Plant Variety Center, National Fisheries Research and Development Institute, Korea

[3]Seaweed Research Institute, National Fisheries Research and Development Institute, Korea

* sangraelee@pusan.ac.kr (antithamnion@hotmail.com)

We have recently reported the complete mitochondrial genomes (mtDNA, mitogenome) of red algae *Pyropia tenera* (NC_021475; 42,268 bp) and *Py. yezoensis* (KF561997; 35,596 bp) from Korea (Hwang et al. 2013, 2014). On intra/interspecific level, mitogenomes of *Py. tenera* and *Py. yezoensis* showed size variations mainly found in the exon/intron structure of *rnl* and *cox1* genes. Moreover, a duplicated copy of the *trnfM-trnQ* region of Chinese *Py. yezoensis* (NC_017837) was not present in Korean *Py. tenera* and *Py. yezoensis* strains. The conserved open reading frames (ORFs) showed the different patterns in the presence/absence and the gene arrangement among *Pyropia* species. Interesting generic feature of mitogenomes of *Pyropia*/*Porphyra* can act as genetic reservoirs for red algae. Moreover, the structural variation and the informative point mutations of mitogenome can provide the novel knowledge for the new molecular markers to differentiate between cultivars of *Pyropia* species. Moreover, these molecular markers can be applied for tracking *Pyropia* species in food ingredients.

References

Hwang MS et al. (2013) Complete sequence and genetic features of the mitochondrial genome of *Pyropia tenera* (Rhodophyta). Plant Biotechnol Rep (2013) 7:435-443.

Hwang MS et al. (2014) Complete mitochondrial genome sequence of *Pyropia yezoensis* (Bangiales, Rhodophyta) from Korea. Plant Biotechnol Rep (2014) 8:221-227.

PP-106

Taxonomic entity and molecular monitoring of green algae blooms from Korea

Sang-Rae Lee[1]*, Jee Eun Lee[1], Jung Hyun Oak[1], Yoon Sik Oh[2], Eun Hee Bae[3] and Eun-Young Lee[3]

[1]Marine Research Institute, Pusan National University, Korea

[2]Division of Life Science, Gyeongsang National University, Korea

[3]National Institute of Biological Resource, Korea

* sangraelee@pusan.ac.kr (antithamnion@hotmail.com)

During 2008 Beijing Olympic season, massive green algae blooms (green tides) occurred around Qingdao province in China. This event caused serious environmental and economic problems. After first report, the large-scale green algae blooms have been continuously reported from Qingdao. Moreover, the green algae bloom was also found in coastal regions of Korea. Many scientists of China, Korea and Japan have studied about the taxonomic identity of these green algal species and the process of green algal blooms on the molecular and eco-physiological levels. From the results of these studies, *Ulva prolifera* was strongly suggested as the bloom-forming alga (*Ulva* LPP group), and an eutrophication was proposed as one of cause of algal blooming because *Ulva* species could acquire sufficient nutrients from the eutrophic seawater. However, the origin and process of green algae blooms have not been clearly resolved. In this study, we examined the molecular taxonomic identity of Korean *Ulva* LPP group. Annual and seasonal field samplings have been conducted from Dec. 2011 to until now. And, we collected 80 populations of *U. prolifera*, *U. linza* and closely related *Ulva* species. We identified Korean *Ulva* LPP group and monitored those distribution patterns in coastal regions of Korea using multiple molecular markers (18S rDNA, ITS, *rbcL*, *tufA*). Molecular characteristics and broaden field surveys of *Ulva* species could provide the important biological clue to interpret the mechanisms of green algae blooms in the Yellow Sea. Moreover, the long-term molecular monitoring can also provide the useful information to predict the future event of green tide in Korea and China.

PP-107

Phytochemical content and antioxidant activity of *Hypnea musciformes* from Bangladesh

S. M. Rafiquzzaman, Jong Min Lee, Gyuyou Noh, Geon-a Jo, Raju Ahmed,
Dong Seop Kang and In Soo Kong*
Department of Biotechnology, Pukyong National University, Busan 608-737, Korea
* iskong@pknu.ac.kr

Seaweeds exhibits valuable pharmacological and biological properties attributed to the presence of various bioactive compounds. *H. musciformes* was extracted with methanol, butanol, ethyl acetate and chloroform. Phytochemical screening of the crude extracts was carried out according to the standard methods. FT-IR and GC-MS analysis were performed to identify the functional constituents and chemical composition present in the crude extracts. The total phenolic content (TPC) and total flavonoid content (TFC) was determined by Folin-Ciocalteu and aluminum chloride method, respectively. Antioxidant activity was assayed using different in vitro models such as total antioxidant capacity by phosphomolybdenum, ABTS and reducing power assay. Different extracts showed the terpenoid, saponin, pholobatanin, cardiac glycosides, phenolics and flavonoid with varying degree. FT-IR results confirmed the presence of phenols, carboxylic acid, ketones, ethers, aromatics, amides and sulphonates. Qualitative analyses of various organic extracts by GC-MS showed that there were different types of high and low molecular weight compounds. The phenolic content of the extracts as gallic acid equivalents were found to be highest in methanol (49.77%) followed by butanol (39.03%), choloroform (20.19%) and ethyl acetate (13.5%). Antioxidant activity was found to be highest with methanol extract followed by butanol, chloroform and ethyl acetate. The results indicated that the extent of antioxidant activity of the extract in accordance with the amount of phenolics present in that extract. Furthermore, methanol and butanol extract inhibited radical induced DNA damage since higher amount of phenolics was detected in that extract compared to ethyl acetate and chloroform extract.

PP-108

Age and growth of the damselfish (*Chromis notata*) in the Jeju Island

Han-Ju Kim[1]*, Han-Na Lee[1], In-Ok Lee[1], Chul-Woong Oh[1]

[1]Department of Marine biology, Pukyong National University, Busan 608-737, Korea

This study was to investigate on age, growth and mortality of damselfish from Jeju Island. Samples were collected monthly by liftnet during the period from September 2013 to March 2014 except January and February 2014. Of the 212 specimens, the sex ratio was not significantly different from a 1:1 ratio by chi-square test ($P > 0.05$). The total length ranged from 6.4 to 13.6 cm. The length-weight relationship of damselfish was $W = 0.2610 \times 10^{-6} TL^{3.884}$ $(\mathrm{n} = 377, r^2 = 0.8937)$. The relationship between length and weight was not significantly different between sexes ($\mathrm{ANCOVA, F} = 0.06, P > 0.05$). The age of the sampled individuals, which ranged from 0 to 4 years, was estimated using the count of growth ring recorded on the otolith. Length-at-age data were fitted using von Bertalanffy growth model. The estimated von Bertalanffy growth functions were $L_t = 183.40(1 - exp^{-0.1(t+5.87)})$ for female; $L_t = 143.16(1 - exp^{-0.2(t+3.78)})$ for male. The estimated length-at-age from otolith was $1\ \mathrm{year} = 85.57\ \mathrm{mm}, 2\ \mathrm{year} = 94.12\ \mathrm{mm}, 3\ \mathrm{year} = 101.92\ \mathrm{mm}, 4\ \mathrm{year} = 109.04\ \mathrm{mm}$ for female; $1\ \mathrm{year} = 86.40\ \mathrm{mm}, 2\ \mathrm{year} = 96.40\ \mathrm{mm}, 3\ \mathrm{year} = 104.62, 4\ \mathrm{year} = 111.47\ \mathrm{mm}$ for male. Total and natural mortality were found to be $\mathrm{Z} = 0.93\ \mathrm{year}^{-1}$ and $\mathrm{M} = 0.49\ \mathrm{year}^{-1}$. Survival rate was 0.39 year^{-1}. These data can be used as biological information suitable for future fishery management of damselfish resource in Korea.

PP-109

New Records of two *Orientomysis* species and one *Nipponomysis* species (Crustacea: Mysida) from Korean Waters

Soo-Gun Jo* and Hyung-Seop Kim

Department of Marine Biotechnology, Kunsan National University, Kunsan 573-701, Korea

Three species of the subfamily Mysinae, *Orientomysis leptura* (Liu and Wang, 1980), *Orientomysis serrata* (Liu and Wang, 1980) and *Nipponomysis fusca* (Ii, 1936) are reported for the first time from Korean waters. *Orientomysis leptura* is characterized by its telson armed with three pairs of strong spines on apex and *O. serrata* by arrangement of spines on lateral margin of telson and two pairs of strong spines on the telson apex. *Nipponomysis fusca* has a linguiform telson armed with several groups of spines on its lateral margin, of which the penultimate larger one being longest among all the marginal spines. *O. leptura* and *O. serrata* have only been known from Chinese waters and the present occurrence from Korean waters is the first record from outside the type locality, China.

PP-110

Species Composition and Distributional Patterns of Macrobenthic Community on the Intertidal Rocky Shore near Ulju, East sea of Korea

Yun-Keun An[1]*, Ho-Seop Yoon[1], Su-Hyun Park[1],
Ju-Won Kwak[2] and Sang-Duk Choi[1]
[1]Division of Marine Technology, Chonnam National University
[2] Division of Fisheries Resources Research Institute, Korea Fisheries Resources Agency

This study investigated the community structure and spatio-temporal variation of macrobenthic assemblages on the intertidal rocky shore of Ulju, East Sea of Korea, from January 2011 to November 2011. A total number of species was 79 species, density was 7,108 individuals and biomass was 18,001.0 g. The species number of macrobenthic community was in the range from 25 in winter to 46 in autumn. Abundance fluctuated between 120and 1,252 inds. m^{-2}. The major dominant species were *Mytilus edulis*, *Thais clavigera* and *Septifer virgatus* in period of investigation. Cluster analysis were applied to assess the spatio-temporal fluctuation in the macrobenthic assemblages. Cluster analysis ordination analysis based of the Bray-Curtis similarity identified 2 groups(Group A: stations 4-7, Group B: stations 1-3). The group A was numerically dominated by the *Mytilus edulis* and *Thais clavigera*. The group B was collected mainly such as *Septifer virgatus* and *Thais bronni*.

PP-111

Enhanced biomass by inositol and its effect in biochemical components of *Tetraselmis* sp.

Kichul Cho[1], Kil-Nam Kim[2], Seongwoon Rho[2], Tatsuya Oda[3], Daekyung Kim[2]*

[1]Korea University of Science & Technology, Korea

[2] Jeju center, Korea Basic Science Institute (KBSI), Jeju 690-756, Korea

[3]Division of Biochemistry, Faculty of Fisheries, Nagasaki University, Nagasaki 852-8521, Japan

In our study, we evaluate effect of myo-inositol (MI) which is well-known plant growth promoting agent in changes of biomass, pigments, protein, carbohydrate, lipid of oceanic microalga *Tetraselmis* sp. isolated from the East Sea. We obtained seawater sample in the Uleungdo coast located in the East Sea. Strain was isolated by serial dilution method and identified by genetic sequence analysis. MI was supplemeted in Erd-Schreiber's modified medium with 0, 50, 100, 200, 400, 600 μg/mL of concentration respectively and cultivated for 10 days. As a result, we found that MI also affects growth of *Tetraselmis* and promoted carbohydrate and protein contents. However, lipid and total carotenoid accumulation rate was rather decreased in a concentration dependent manner. Because MI is using for health functional food and non-toxic material, these results suggest that MI can be a good reagent for producing high protein and carbohydrate containing *Tetraselmis* biomass which have been widely using for live food of artemia and fishes.

PP-112

Effective RNA-silencing strategy of Lv-MSTN/GDF11 gene and its effects on the growth in shrimp, *Litopenaeus vannamei*

Ji-Hyun Lee[1]*, Jalal Momani[2]*, and Hyun-Woo Kim[12]

[1]Interdisciplinary program of Biomedical Engineering, Pukyong National University

[2]Department of Marine Biology, Pukyong National University

Myostatin, also known as GDF8, has been paid attention for the economic benefit to the livestock and aquaculture industry because of its inhibitory effects on muscle growth and development. Recently, Lv-MSTN/GDF11, the primitive isoform of myostatin and GDF11, was isolated from shrimp, *Litopenaeus vannamei*. The major production site for Lv-MSTN/GDF11 was heart not tail muscle suggesting its function may be different from those in mammals. Among three different RNA injections, long dsRNA turned out to be the most effective strategy for Lv-MSTN/GDF11 knockdown. 72 hours after 10 μM of long dsRNA injection, expression of Lv-MSTN/GDF11 gene decreased in heart (88.85%) and skeletal muscle (43.36%). We also identified that dose of dsRNA injection did not show any effects on the degree of decreasing Lv-MSTN/GDF11 transcript. dsRNA injection did not affect in upregulating actin (Lv-ACTINSK) gene in tail muscle, which suggests that Lv-MSTN/GDF11 may not be involved in skeletal muscle fiber production in shrimp. The major phenotype of chronic dsRNA injection (8 weeks) was the high mortality (~71%) indicating that Lv-MSTN/GDF11 is essential for survival of shrimp. Even the survived shrimp in dsRNA injected group showed the lower growth and molting rates exhibiting the adversary effects of Lv-MSTN/GDF knockdown in growth and molting in shrimp. Collectively, biological implications of Lv-MSTN/GDF11 appear to be considerably different from those in mammals and this gene may not be suitable for the target for enhancing productivity in shrimp aquaculture.

PP-113

Growth and living depth of young mud shrimp (*Upogebia major*) in The Boryeong tidal flat in South Korea

Jae-Hee Song*, Hyun-Mi Ahn, Yoon-Seok Choi, Sang-Pil Yoon,
Kwang-Jae Park, Sang-Ok Jeong and Kyoung-Ho An
Tidal Flat Research Institute, National Fisheries Research and Development Institute

Recently, a large part of manila clam farms in western coast of South Korea were severely colonized by high density mud shrimp population. These mud shrimps have been presumed to affect on the production of manila clam at least in the last 10 years in Korea. Therefore manila clam farmers in Korea earnestly want to effective and economic control strategies of the mud shrimps. To obtain biological informations for effective control strategies of mud shrimps, we investigated growth and living depth of young mud shrimps from June 2013 to April 2014 since they settled down on tidal flat located in the Boryeong-si. Average carapace length of mud shrimp, about 1 month has elapsed after settlement, was 3.43 mm (range : 1.73~5.61 mm) on June 27, 2013, and it was grown to 11.70 mm (9.08~14.04 mm) on December 24, 2014. Total length of young mud shrimps were grown about 3 times from 8.53 mm on June to 38.88 mm on December, 2013. Rapid growth of total length of mud shrimp was observed from early August to early October, 2013. However after that periods growth of mud shrimp was become slow until late March, 2014. Total wet weight of young mud shrimps increased from 9.6 μg (June) to 566.7 μg (December), and daily total wet weight of young mud shrimp was most rapidly increased from September to October in 2013. We also surveyed the living depth of mud shrimps to decide suitable and effective tidal flat plowing period. The depth of young mud shrimps from June to December in 2013 were usually below 20 cm from the surface. Considering the living depth of 1-year old young mud shrimps and general tillage depth of agricultural tracter's plow, we think that repeated plowing during spring and fall season may considerably reduce the mud shrimp population living in clam farms.

PP-114

Phenology of host *Chondrus ocellaus* with filamentous green endophytes infection

Chan-song Kim[1], Gyu Sang Kang[1], Han Gil Choi[2],Young Sik Kim[1]* and Ki Wan Nam[3]
[1]Kunsan National University, [2]Wonkwang University,
[3]Pukyong National University

Several filamentous endophytes are previously reported associated with *Chondrus.* This study is the first to investigate the interaction between host *Chondus ocellatus* and several green endophytic algae in the field. *Chondrus ocellatus* was collected from September, 2013 to May, 2014 in Wando, southern coast of Korea. The vegetative plant dominated over the year, with a peak occurrence in May. Gameto- and tetrasporaphytes were most abundant in December and October, respectively. All vegetative and reproductive plants had a peak both in length and weight in September, when seawater temperature was highest. In our study, three green endophytic filamentous algae, *Ulvella leptochaete*, *Blastophysa rhizopus*, and *Bolbocoleon piliferum* were identified based on the unialgal cultures. Endophytes were observed in *Chondrus* species over all months. However, values of high frequency of uninfected *Chondrus* species were recorded from December to February.

PP-115

Anti-inflammatory effect of byproducts from Haliotis discus hannai in Raw 264.7 cells

Ho-Seok Rho[1], Jung-Ae Kim[2,3], and Chang-Suk Kong[3*]

[1] **Production support team, Marine Biotechnology Research Institute, JeollaNamdo 537-807,** Korea

[2] Department of Food and Nutrition, College of Medical and Life Science, Silla University, Busan 617-736, Korea

[3] Department of Food and Nutrition, Silla University, Busan 617-736, Korea

Several reports promoted the potential of shellfish due to their ability to act as antioxidant, anti-inflammatory and antimicrobial agents. Pacific abalone, Haliotis discus hannai viscera is reported to possess bioactivities such as anti-oxidative stress and antiinflammatory. In this study, anti-inflammatory potential of mucus-secreting glands from shell-shucking waste of H. discus hannai was evaluated using RAW 264.7 mouse macrophage cell model. Results indicated that presence of H. discus hannai mucosubstance by-products (AM) significantly lowered the nitric oxide (NO) production along the expressional suppression of inflammatory mediators such as cytokines TNF-α, IL-1β and IL-6 and enzymes iNOS, COX-2. Also, AM was shown to increase expression of anti-inflammatory response mediator HO-1. Presence of AM also scavenged the free radicals in vitro. In conclusion, by-products of H. discus hannai are suggested to possess notable anti-inflammatory potential which promotes the possibility of utilization as functional food ingredient.

PP-116

Molecular characterization of Korean jellyfish and implications for their species identities

Yu Won Bae[1], Ruoyu Guo[1], Boopathi Thangavelu[2], Ponmani Thangaraj[2], Jinho Chae[3], Chang-hoon Han[4], Won Duk Yoon[4] and Jang-Seu Ki[1*]

[1]Department of Life Science, Sangmyung University, Seoul 110-743, Korea

[2]Institute of Life Science, Sangmyung University, Seoul 110-743, Korea

[3]Korean environmental Research Center for Hydrosphere, Ansan 426-857, Gyeonggi-do, Korea

[4]Fishery and Ocean Information Division, NFRDI, Busan 619-705, Korea

Recent advanced DNA-based approaches are very effective and useful for the discriminations of morphologically unidentified, cryptic species, and/or fragile organisms like cnidarian members. In jellyfish, the identification of gelatinous or sometimes small organisms is very difficult, because shapes of their medusae are highly variable under environments and nutrition, as well as they have different life stages (polyp, ephyra, and medusa). In this study, we introduce “Reverse Taxonomy for jellyfish”, that an approach towards determining the identity and diversity of jellyfish based on ribosomal RNA (rRNA) signature sequences. We constructed two set of rRNA signature sequences, including small subunit and large-subunit, in which sequences were retrieved from our jellyfish DNA database and public domains. We tested specimens of jellyfish collected from Koran coasts, and determined their partial sequences of SSU and/or LSU rRNA. Upon comparisons of DNA sequence data, we could identify five species of jellyfish, including *Aurelia* sp.1, *Blackfordia virginica, Chrysaora pacifica, Cyanea nozakii, Parumbrosa* sp., *Physalia physalis, Pelagia noctiluca, Polyorchis penicillatus*, and *Turritopsis* sp., and evaluated sequence variation among same species. This study provide some useful signature sequences of jellyfish, and highlights “Reverse Taxonomy” for jellyfish.

PP-117

Studies on biomass of marine microalgae, *Nanochloropsis salina*

Han-Joo Lee[1]*, Young-Jae I[1], Do-Guen Lee[1], Seung-Jun Park[1],
Jong-Seo Seon[1],Sang-Mok Jung[1], and H.W Shin[1]
[1]Department of life science biotechnology, Soonchunhyang University

Marine microalgae are one of the most promising sources of renewable biomass that also increase to food, pharmaceutical materials and carbon dioxide mitigation. Algae have carbon dioxide fixation ability and solar energy utilization efficiency that higher than normal plants. And it is optimized for a high probability of cultures. Most of counties are competitively developing the algae culture for commercial purpose of biofuels because have some problems using the terrestrial plants as a food. Therefore, crops prices lead to high, face severe food shortages. In this respect, the alternative to non-food crops to take advantage of the microalgae biomass studies are conducting. But producing microalgae biomass is still more expense than growing crops. This requires the efficient use of light, carbon dioxide, water and nutrients. In term of these, the media need lots of chemicals and manpower efforts. Thus, the low cost and profitable media production should be developed. For the microalgae biomass of the economic production, land fertilizer found and used as culture media microalgae, *Nannochloropsis salina*. This study optimized culture conditions with commercial land fertilizer. The microalgae incubated with chamber that controls a lightness and temperature. The lightness and temperature gradients were five different ranges monitored growth rates. For growth rate, the cell counted by a microscope and optical density (680 nm) was a spectrophotometer, which quantitative analysis was performed.

PP-118

Asymmetric distribution of mitochondria and unequal cell divisions in the chordate *Halocynthia roretzi*

Yong Han Baek, Ji Won Lee and Gil Jung Kim

Department of Marine Molecular Biotechnology, Gangneung-Wonju National University

Localized factors and organelles in egg cytoplasm are critical for formation of various cell types during animal embryogenesis. In chordate eggs, asymmetric distribution of mitochondria is often maintained and leads to the differential segregation of mitochondria among blastomeres, as for example occurs in tunicate embryos. In this study we examined distribution of mitochondria in embryos of the tunicate, *Halocynthia roretzi*, by immunohistochemical staining with the mitochondria-specific antibody 101. At the 32-cell stage, mitochondria were preferentially partitioned into cells of the B-line muscle precursor and the A-line neural precursor compared with each sister cell. However, the mitochondria-rich cytoplasm was divided equally among the blastomeres of the animal hemisphere between the 8-cell and the 64-cell stages. When the B6.2 blastomere was isolated at the early 32-cell stage embryo and then allowed to divide 2 times of cell division, the resultant partial embryos showed symmetric distribution of mitochondria between the B8.5 mesenchyme and the B8.6 secondary notochord precursors. In addition, the partial embryos were composed of equal size cells. In normal development, cell fates of the B7.3 blastomere were correlated with the unequal cell division of B7.3 that normally occurs in the next cleavage stage to produce a large B8.5 mesenchyme and a small B8.6 notochord cell. Mitochondria are distributed asymmetrically in both cells. We will present that FGF/MEK signaling involved in these processes.

PP-119

New record of the Marlin sucker, *Remora osteochir* (Perciformes: Echeneidae) from Jeju Island, Korea

Se Hun Myoung and Jin-Koo Kim*

Departme Department of Marine Biology, Pukyong National University

The family Echeneidae belonging to order Perciformes consists of 8 species and 4 genera in the World (Nelson, 2006), 7 species and 3 genera in Japan (Nakabo, 2002), 4 species and 4 genera in Korea (Lee and Joo, 2006). This family is characterized by having the sucking disc on head; lower jaw projecting past upper jaw; dorsal and anal fins lacking spines. A single specimen (240 mmSL) of *Remora osteochir* was firstly collected from Jeju Island, Korea in August 2013. It was identified as *R. osteochir* by having a sucker with 18 pairs of disc laminae, dorsal fin rays 25, anal fin rays 24, and vertebrae 27. This specimens is similar to *Remora remora* (Linnaeus, 1758) in morphological characters such as body shape and the number of disc laminae, but differed in position of posterior end of sucking disc (behind posterior end of pectoral fin in *R. osteochir* vs. before posterior end of pectoral fin in *R. remora*), gill rackers (3+14 vs. 4-5+24-32) (Paulin and Habib, 1982; Nakabo, 2002).

PP-120

Community structure of macrobenthic assemblages in Uljin marine ranching area, Korea

Han-Na Lee[1*], In-Soo Seo[2], Chul-Woong Oh[1], Jung-Pyo Hong[3], Jung-Yeon Kim[1] and Seong-Eun Kim[1]

[1]Department of Marine Biology, Pukyong National University

[2]Korea Benthos Research Center Co.

[3]Resources Management Head guarter, Korea Fisheries Resources Agency

The aim of this study is to identify the community structure of macrobenthos in marine ranching of Uljin and to describe the spatial and temporal patterns. Macrobenthos samples were collected at ten stations in spring and summer by van Veen grab sampler (0.1 m^2). Environmental factors, such as temperature, dissolved oxygen concentration (DO) and precipitation, showed significant seasonal difference ($P<0.05$). In addition, DO, temperature and dissolved inorganic nitrogen (DIN) showed significant spatial difference ($P<0.05$). Principal components analysis (PCA) showed two groups by first axis (explained variance=83.4%, eigenvalue=0.535). Total 345 species were reported. Polychaeta was most abundant in all stations. Crustacea and Mollusca were abundant in shallow station1, 2, 4, 5, 7, 8, 10. On the other hand, Echinodermata was abundant in deeper station 3, 6, 9. In multivariate analysis, macrobenthos assemblages represented three spatial group in individual number and biomass among the depth. Two shallow group were dominated by *Spiophanes bombyx* and the other group C dominated by *Magelona* sp.1. Richness, evenness and diversity also showed significant difference among groups ($P<0.001$). These separated grouping was related to the environmental changes, such as temperature, DO and sediment composition. Other studies in Uljin also showed similar macrobenthos community pattern.

PP-121

Introduction of Marine Fish Resource Bank of Korea (MFRBK)

Jin-Koo Kim[1*], Jung-Hwa Ryu[2], Soo-Jeong Lee[1], Young-Sun Song[1], Se-Hun Myoung[1], Seung-Eun Bae[1], Hyo-Jae Yu[1], Woo-Jun Lee[1] and Sang-Yun Han[1]

[1]Department of Marine Biology, Pukyong National University

[2]Ryujunghwa Marine Research Institute

The Convention on Biological Diversity (CBD) was adopted through international consensus for Biodiversity conservation, sustainable use and benefit-sharing of bio-resources in 1992. Thereafter, Nagoya Protocol regarding access to genetic resources and benefit-sharing (ABS) was selected at the 10th meeting of CBD in 2010. Based on this international situation, it needs to establish and operate the Bio-Resources bank in order to protect a sovereignty of marine organisms around the Korean waters. In this necessity, the Ministry of Maritime Affairs and Fisheries (MOMAF) of Korea tried to organize the Marine Bio-Resources Bank. As a result, a total of 13 Marine Bio-Resources Bank were built under the direction of MOMAF of Korea until 2013; 1) Korea Marine Microalgae Culture Center, 2) Marine Toxic Bio-Resource Bank of Korea, 3) Korean Coral Resource Bank, 4) Sponge/Echinoderm/Bryozoan Resource Bank of Korea, 5) Marine Microbial Resource Bank, 6) Marine Arthropod Depository Bank of Korea, 7) Korean Marine Plant Collection, 8) Marine Mollusk Resource Bank of Korea, 9) Marine Green Algal Resources Bank, 10) Marine Brown Algal Resources Bank, 11) Marine Fish Resource Bank of Korea, 12) Marine Fungus Resource Bank of Korea and 13) Marine Nemathelminthes Resource Bank of Korea. Of them, Marine Fish Resource Bank of Korea (MFRBK) was established in Pukyong National University on December 2013, and is working on collection, deposition, registration, preservation and supply of diverse marine fish in Korea. Until today, we collected a total of 134 fish species and 1,388 collections, comprising 12 species of big sized fish (mainly sharks; 34 collections), 21 species of valuable candidate fish (mainly puffers; 224 collections), 23 species of regional fish (mainly broadly distributed fish; 322 collections), and 65 species of unused fish (mainly small sized or non-commercial fish; 462 collections).

PP-122

Distribution Patterns of Polychaete Assemblages and Benthic Quality Status estimated by AMBI in Jindo-Jejudo Subtidal areas

Kwang-Bae Kim*, Jae-Hoon Cha, Dong-Young Kim, Ji-Na Song,
Doo-Chan Um and Chul Hwui Kwoun
Land Ocean Environment Co Ltd. D-1301, Digital Empire Bldg., Suwon, Korea

This study was carried out at 7 Jindo and 7 Jejudo stations (a total of 14 stations) in subtidal areas in order to understand the faunal structure of polychaete assemblage and ecological quality of benthic environment. The results of sediment analysis showed a mud/sand sedimentary facies in the Jindo areas while the Jejudo area had higher sand content. There were 68 species of polychaetes in a total of 14 stations, with a mean density of 231 inds./m^2, and 61 species, 167 inds./m^2 and 62 species, 295 inds./m^2 in Jindo areas and Jejudo areas, respectively. The dominant species in Jindo areas were *Heteromastus filiformis, Ampharete arctica, Prionospio* sp., *Sigambra tentaculata, Thelepus* sp. whereas *Amphicteis gunneri, Ampharete arctica, Prionospio* sp., *Telepsavus costarum, Heteromastus filiformis* were represented the dominant species in Jejudo areas. The result of cluster analysis showed that the stations were clearly clustered with Jindo and Jejudo subtidal areas except ST 5 and 8. So two regions showed different geographical location, sendimentary facies and the distributions of polychaete assemblage. There were no first-order opportunistic species included in V grade at all stations and fauna included in II grade were dominated in Jindo and Jejudo subtidal zones. Thus the benthic quality status estimated by AMBI values was in a normal or slightly polluted condition.

PP-123

Treatment of fishery waste by *Bacillus licheniformis* TK3-Y possessing multiple enzymes

Kyeong Hwan Kang, Jang Ho Kang and Joong Kyun Kim
Department of Biotechnology and Bioengineering, Pukyong National University

Total amount of fishery production of Korea is approximately 3 million tons per year. Approximately 0.7 million tons of fishery waste is annually generated via fish processing. Since, ocean disposal of fishery waste has been prohibited since 2013, its treatment and recycle of fishery waste have attracted attention. Fishery waste contains lots of degradable carbohydrates, proteins, lipids, salts and etc. Thus, potential microorganisms degrading the polymers to low molecule compounds were focused on treatment of fishery waste. The cellulolytic, proteolytic and lipolytic abilities were tested on agar plate contains carboxymethyl cellulose, skim milk and spirit blue, respectively. Treatment experiments were carried out in 1 L flask (with 250 mL of working volume) using the mixed-substrate medium containing carboxymethyl cellulose, soybean meal and olive oil and fishery waste medium for 1 week. The inoculum used in this experiment as 10% (v/v) and the flask was incubated at 50°C and 160 rpm. To evaluate fishery waste treatment, COD, TN, pH, and TLC were analyzed. To check the influence of NaCl concentration on enzyme activities, 0 - 30% NaCl buffer solutions were used. By clearance zone test and change of colony color, cellulolytic and proteolytic lipolytic activities of the strain were confirmed. In flask culture, COD and TN removal were 22 and 38% respectively and the final pH was 7.9. The degradation degree of carbohydrate and protein were revealed by TLC. The related enzyme activities and the concentration of degradation products were increased at higher NaCl concentration. It was shown TK3-Y strain had multiple enzymes and ability to degrade the polymers simultaneously. The biodegraded products are expected for utilization as both fertilizer and feedstock of bioenergy.

Acknowledgement

This research was supported by a grant (2011-0014840) from the National Research Foundation of Korea.

References

Trivedi N, Gupta V, Kumar M, Kumari P, Reddy CRK and Jha B, 2011. An alkali-halotolerant cellulose from *Bacillus flexus* isolated from green seaweed *Ulva lactuca*. Carbohyd Pol 83(2), 891-897.

Gwon BG and Kim JK. 2012. Feasibility study on production of liquid fertilizer in a 1 m^3 reactor using fishmeal wastewater for commercialization. Environ Eng Res 17(1), 3-8.

PP-124

Fertilizing value of the liquid fertilizer produced by biodegradation of fish- wastewater in plant scale

Kyeong Hwan Kang, Jang Ho Kang, Joong Kyun Kim
Department of Biotechnology, Pukyong National University, Busan 608-737, Korea

The amount of fish-wastewater from processing of fish food is steadily expected to increase. And, fish- wastewater is treated in ocean dumping and landfill. However, processing such as ocean dumping and landfill is difficult because of the problems that cause environmental pollution. Therefore, fish-wastewater, must be processed in environmental and effective. In this study was conducted to investigate aerobic biodegradation of fish-wastewater in a plant scale for liquid fertilizer for field test. A scaled-up biodegradation of fish-wastewater into liquid fertilizer was performed in a 1-ton plant scale reactor. Biodegradation was performed by inoculation of autoclaved fish waste of mixed microorganisms for 81 h in a 1-ton plant scale reactor. As a result, the pH changed from 6.86 to 5.73. The average removal percentages of chemical oxygen demand (CODcr), total nitrogen (TN) and degradation of solid fish-waste were 73.2%, 64.9%, 66.3% at the plant scale respectively. Heavy metals (As, Ni, Cr, Cd, Ti) concentration was very low and below the reference value. Lettuce was cultivated with amino acid content of 7.38 g 100 g^{-1} in a plantation for two weeks, improved in amount (20.2%), leaf number (15%), leaf length (17%), leaf size (23.9%), leaf width (15.8%), and total weight (20%) as compared to non-treated control. And cabbage was improved amount (17%), leaf number (28%), leaf length (25%), leaf size (25.7%), leaf width (21%), and total weight (21%). Therefore, recycling of liquid fertilizer using the bioconversion of waste of fish can be achieved with zero emission to bring the performance and potential of commercial fertilizer.

Acknowledgments

This research was supported by a Eip project of Korea Industrial complex Corporation for the Ministry of Knowledge Economy (receipt number: 20100851).

References

Dao VT, Kim JK, 2012. Scaled-up bioconversion of fish waste to liquid fertilizer using a 5-L ribbon type reactor. J Environ Manage. 92, 2441-2446.

Kim JK, Dao VT, Kong IS and Lee HH, 2010. Identification and characterization of microorganisms from earthworm viscera for the conversion of fish wastes into liquid fertilizer. Biores Technol 101, 5131-5136.

PP-125

Biodegradation of Brown-Seaweed Powder with Improved Solubility under of Optimal Condition

Da Som Kang, Joong Kyun Kim
Department of biotechnology, Pukyong National University
TEL: +82-51-629-5866, FAX: +82-51-629-5863

During recent years, the amount of seaweed waste has increased due to its culturing as an industrial resource and a depolluting plant for cleaning inland sea area, and eutrophication of seawater. The efficient treatment of seaweed waste is deemed necessary nowadays. Brown seaweed contains polysaccharides such as laminarin and alginate. Alginates are normally present in algae cell walls as insoluble calcium or magnesium salts, being responsible for their strong, flexible tissue. In this study, we used *Laminiaria japonica* powder and some bacteria which have potential to degrade it. Because of its low solubility, it is difficult for bacteria to degrade brown seaweeds for producing sugars. So, for increasing solubility of the powder, pre-treatment was chosen. This procedure was divided two parts, physical and chemical treatment. As physical treatment, we grinded seaweed powder to reduce its particle size. The addition of 0.1% (w/v) NaOH solution and sonication was used as chemical treatment. As a result, the solubility was increased to 94% compared with its initial solubility (58%). The optimum conditions for the biodegradation were found to be pH 6, 37°C, 10 g/L of brown-seaweed powder. Basing from results, ideal feeding strategy related to cell growth will be obtained.

Acknowledgments

This research was supported by a grant (receipt number: 20100576) from the Ministry for Food, Agriculture, Forestry and Fisheries.

References

1. Blanco-Pascual, N. M., Montero, P., Gomez-Guillen M.C., 2014, Antioxidant film development from unrefined extracts of brown seaweeds *Laminaria digitata* and *Ascophyllum nodosum*. Food Hydrocolloids, 37, 100-110.

2. Lee. J. Y., Kim, Y. S., Um, B. H., Oh, K. K., 2013, Pretreatment of *Laminaria japonica* for bioethanol production with extremely low acid concentration. Renewable Energy, 54, 196-200.

3. Adams, J. M., Gallagher, J. A., Donnison, I. S., 2009, Fermentation study on *Saccharina latissima* for bioethanol production considering nariable pre-treatments. J Appl Phycol, 21, 569-574.

PP-126

Improved Brown Seaweed Polysaccharides Hydrolyzing Enzyme Ability by Chemical Mutation

Da Som Kang, Sung Eun Kim, and Joong Kyun Kim
Dept. of Biotechnology, Pukyong National University, Busan.
TEL : +82-51-629-5866, FAX : +82-51-629-5863

Seaweed is used for various field such as food, fertilizer, drugs and cosmetics. However, polysaccharides contained in are emerged from extraction process. If waste should be reused through biodegradation, It could be another good source. Therefore, our objective is to improve biodegradation ability of useful bacteria by treating chemicals. We conducted an experiment of degradation on each of 0.1% laminarin, alginate and CMCs. Six bacteria were treated by four chemicals, which are EMS, L-ethionine, Menadinone and LiCl. As a result of experiment on laminarin via clear zone, four type of bacteria were improved from min 160% to max 200%. We tested on alginate and CMCs to use EMS as well. The reason why we used only EMS is we gain the most of degradation ability. On alginate, It is also enhancement from minimum 130% to maximum 200%. Mutant exhibited higher degradation on above polysacchrides. However, all of mutants could do biodegradation on 0.1% substrates. A notable point was that one of mutants showed enzyme activity, which was no active newly by mutation. Optimization of mutation condition along with time and concentration is next study.

Acknowledge

This research was supported by a grant (2011-0014840) from the National Research Foundation of Korea.

Reference

1. Pradeep, M. R. and Narasimha, G., Utilization of Pea Seed Husk as a Substrate for Cellulase Production by Mutant *Aspergillus niger* (2011), Ins. Biotechnol., 1(2), 17-22.
2. IKRAM-UL-HAQ, S., Saleem, A., and Javed, M. M. Mutagenesis of *Bacillus licheniformis* through Ethyl Methanesulfonate for Alpha mylase production (2009), Pak. J. Bot., 41(3), 1489-1498.

PP-127

Production of Bioactive Compounds from Mackerel Wastewater by Mixed Culture

Hyun Yi Jung, Joong Kyun Kim
Department of Biotechnology, Pukyong National University
TEL: +82-51-629-5866, Fax: +82-51-629-5863

In recent years, fish consumption and fishery wastes in the world have increased steadily because seafood is gaining popularity due to its health benefits. For this reason, eco-friendly treatments of fishery wastes have been suggested. Fishery wastes are valuable sources of raw material for recovery of bioactive compounds. In this study, we focused on peptide having antioxidant activity. Mixed microorganisms have degrading activity on protein, lipid and they are salt-tolerant. So, they degrade mackerel more than other microorganisms. Mackerel has more proteins than other fishes. Antioxidant activity was tested by DPPH, ABTS, reducing power and hydroxyl radical assay. The antioxidant activity of the biodegraded wastewater was assayed every 6h. The results revealed that all samples are potent antioxidants, capable of scavenging more than 80%. Particularly, the highest value of DPPH radical scavenging activity was 87% at 24h. Especially, some amino acids such as histidine, tryptophan, methionine and leucine have reported to contribute to the scavenging of free radicals. We identified these amino acids by thin layer chromatography. Also, we tested DNA damage inhibition of samples taken during biodegradation. All the samples had DNA protecting activity. We will examine biofunctional matters from biodegraded wastewater to improve value of reutilization.

Acknowledgement

This research was supported by 2012 Pukyong national university (PK-2012-97).

References

1. Sheriff, S.A., Balasubramanian, S., Baranitharan, R., Ponmurugan, P., Synthesis and in vitro antioxidant functions of protein hydrolysate from backbones of Rastrelliger kanagurta by proteolytic enzymes (2013), Saudi Journal of Biological Sciences, 21(1), 19–26.

2. Gwon, B.G., Kim, J.K., Feasibility Study on Production of Liquid Fertilizer in a 1 ㎥ Reactor Using Fishmeal Wastewater for Commercialization (2012), Environ. Eng. Res., 17(1), 1-6.

3. Kumar, N.S.S., Nazeer, R.A., Jaiganesh, R., Purification and biochemical characterization of antioxidant peptide from horse mackerel (Magalaspis cordyla) viscera protein (2011), Peptides, 32, 1496–1501.

PP-128

Production of Reducing Sugars from Brown-Seaweed Polysaccharides by Mixed Culture

Hyun Yi Jung, Hee Jin Lee and Joong Kyun Kim
Department of Biotechnology, Pukyong National University, Busan
TEL : +82-51-629-5866, Fax : +82-51-629-5863

The world is now facing the gradual depletion of non-renewable energy and environmental pollution. The disposal and reutilization of treated fishery waste has become an important issue. Brown seaweed is produced most abandantly in Korea and some parts of it has been used as a source of healthy food and pharmaceutical agent, but the remaining materials are usually wasted. To reutilization of seaweed waste, six strains were isolated from marine environment, and clearly possessed laminarinase and alginate lyase activity. High enzyme activity is required for conversion of laminarin and alginate into useful reducing sugars to save time and cost for saccharification. In this study, optimum pH, temperature and laminarin and alginate concentrations were respectively examined for enhanced production of reducing sugars by mixed culture in flask unit. The optimum conditions for the biodegradation were found to be pH 8, 37°C, and 10 g/L of laminarin. The production yield of reducing sugars was 27.4% and pH reached to 5.78 at the end. TLC analyses of laminarin degradation showed that oligo- and tri-saccharides were produced by mixed culture.

Acknowledgments

This research was supported by a grant (2011-0014840) from the National Research Foundation of Korea.

Reference

1. Tang, J.C., Wei, J.H., Maeda, K., Zhou, Q., Hosoi-Tanabe, S., Nagata, S. 2007. Degradation of the seaweed Wakame (*Undaria pinnatifida*) by a composting process with the inoculation of *Bacillus* sp. HR6. Biocontrol Sci., 12, 47-54

2. Tang, J., Wang, M., Zhou, Q., Nagata, S. 2011. Improved composting of *Undaria pinnatifida* seaweed by inoculation with *Halomonas* and *Gracilibacillus* sp, isolated from marine environments. Bioresour. Technol., 102, 2925-2930.

PP-129

Screening and investigation of biofouling attractants

Seul-Gi Kang[1]*, Gwang-Tae Kim[1], Eun-Ji Han[1], Jin-Hee Kim[1], Young-Eun Bang[1], Hye-Jin Do[1], H.W-Shin[1], and In–Bong Lee[2]

[1]Department of Life Science Biotechnology, Soonchunhyang University

[2]Greenkorea CO., LTD.

The global warming is impacting marine environment causing “whitening event” by calcareous algae where they cover to rocky substrate. The whitening hampers the fouling organisms of coastal area, mostly, fishes, seaweeds and marine invertebrates such as shell fishes, sea cucumber and others. Especially, the seaweeds are very important role of marine environment which providing the marine animal’s habitats and food-rich areas. Therefore, propagation of algae is an important step to increase as well as restore the marine productivity. In Korea, the south, east and west coastal area appeared and covered with this whitening. In this reason, Korea government deploys a man-made structure called an artificial reef which is providing new substrates to foul seaweed and marine animals. The artificial reef is generally composed of cement, iron, plastics, and other materials that often causing harmful effects. To solve these problems, the surface should be needed with new materials or chemical treatments. In this purpose, fouling attractant candidates, linoleic acid and *D*-mannitol, were screened fouling activities with bacteria, microalgae and macroalgae. The bacterial activities were shown no inhibition zone and non-toxic. The attachment of microalgae and macroalgae were increased on the candidates.

PP-130

Development of chemoattractant coating for marine organisms

Gwang-Tae Kim[1]*, Seul-Gi Kang[1], Eun-Ji Cho[1], Su-Jin Song[1], Yu-Jeong Lee[1], Ji-Young Jeon[1], H.W Shin[1], and In-Bong Lee[2]

[1]Department of Life Science Biotechnology, Soonchunhyang University

[2]Greenkorea CO., LTD.

Climate change caused by increasing atmospheric carbon dioxide. It is affecting the temperature increase of marine environment that decreasing and disappearing marine organisms. Because of this, algal whitening which is associated with decreases in the seaweed flora of some rocky area and some species of crustose algae. This is now recognized as a natural hazard adversely affecting marine environment and damaging commercial fisheries. It is not only fishes, invertebrate and animals as well as seaweeds which many marine animals use as a food. In the past 30 years, Korea government deploys an artificial reef composed concretes, irons or plastics in coastal area where an enrichment and diversification of the local fish community, with an increase in the seaweed. But the seawater status could react with artificial reef material which can be released toxic substances. To protect the artificial reef's surface, it needs to develop a coating for fertilizing the marine organisms. For this, fouling candidate compounds, Lecithin, Inositol, Iron sulfate, linoleic acid and *D*-mannitol, homogenized with resins, pigments and other additives to coat the surface. The coatings performance screened with bacteria, microalgae and macroalgae. The tests of bacteria, *Bacillus* sp., showed to non-toxic effects. The coating treated surface increased the attachment of microalgae and macroalgae compared with non-treated.

PP-131

Non-toxic antifouling coatings with silicone polyurea

A-Reum Kim[1*], Ji-Su Son[1], Dae-Kwon Song[1], Jae-Hyuk Jeon[1], Hoon-Ju Lee[1],
Sang-Mok Jung[1], H.W Shin[1] and Chu-Youl Kang[2]
[1]Department of Life Science Biotechnology, Soonchunhyang University
[2]DURACHEMIE CO., LTD.

Marine biofouling cause many problems to the man-made structure such as fish net, marine power plant and ship industry. The Ship suffer increased drag and surface corrosion, leading to lower speeds, thereby causing higher fuel consumption, additional CO_2 emissions and maintenance costs. To avoid the attachment of marine organisms, the ship is painted. The key mechanisms of antifouling paint are self-polishing polymers which hydrolyzed in seawater as well as fouling organisms prevent. For these mechanisms, an acrylate chemically coupled with tributyltin or copper compounds. However, those compounds are very toxic substance to many marine non-target organisms. It is accumulated in sediments but there is a risk of release into the water if conditions change. To improve these problems, new antifouling system developed is foul release system by using silicon polymers. It is only depending on low surface energy that does not rely on biocides. But silicone disadvantage is very expensive that should be re-coating if surface damaged in strong fouling or external shock. In this defect, the silicone coatings needed to give a little antifouling activities with natural substances. The silicone polyurea mixed with antifouling agents, tymol and hemoglobin. The mixture screened an antifouling activity of bacteria, microalgae and macroalgae. Also physical characteristic determined by ASTM methods.+

PP-132

Study on antifouling activity of new AF agents

A-Reum Kim[1]*, Dong-Yeop Han[1], Young-Ho Seo[1], Jong-Min Lee[1], Eun-Ji Kim[1],
Sang-Mok Jung[1], H.W Shin[1], and Ju-Yeol Kang[2],
[1]Department of Life Science Biotechnology, Soonchunhyang University
[2]DURACHEMIE CO., LTD.

Marine biofouling is one of the most important problems faced by marine technologies. The problems cause the settling on power plant cooling systems, aquaculture systems, fishing net, pipelines and other marine infrastructure. Especially, these organisms attach to the hull, which increase the friction of the boat in the seawater. This lowers speed, impairs maneuverability and ultimately increases fuel consumption. To prevent the attachment of fouling organisms, the surface are painted. Traditional paints are based on the toxic substance such as Cu and Sn which they can prevent the fouling on surface strongly. However, many use of Cu and Sn accumulated high in sediments. In 2003, the Sn metal already banned worldwide as well as Cu ready to control. Beside these toxic compounds, organic biocides used to boost as Zinc pyrithione, copper pyrithione, irgarol and others. It is also very severe problem in marine biota, limitation usages. In this situation, alternatives as non-toxic should be found for marine environment. In this study, the antifouling candidates, tymol and hemoglobin, were tested to antifouling activities against bacteria, microalgae and macroalgae.

PP-133

Study on Water Quality of Oyster farming waters in Goseong Bay

Joo-Eun Woo, Woo-Geon Jeong, Sand-Man Cho[1]

Department of Marine Biology & Aquaculture, Gyeongsang National University, Tongyeong 650-160, Korea

[1]Department of Aquaculture and Aquatic science, Kunsan National Unoversity, Gunsan, Korea

A semi-closed bay, Goseong Bay is located on the Goseong Peninsula in Gyeongnam Province. It characterized a narrow entrance and triangle like shape geographically. From the entrance, the depth of water gets, northward, shallower with average 6.2 m, 25 m in the deepest and 2,165×$10^4$$m^2$ in the area. During decades, this bay has been renowned for aquaculture, especially for oyster farming. Oyster is a filter feeder as well as potential pollution load which accelerates biodeposition on the oyster bed, which affects the water quality on the surrounding waters. Therefore this study investigated the change of water qualities around the oyster farm from 2013 to 2014. Temperature, salinity and DO of water were determined by using YSI 85 (YSI Life Science, USA), and pH was by Thermo ORION 3STAR. The coliforms and fecal coliform were determined following「Recommended Procedure for the Examination of Sea Water and Shellfish(A.P.H.A, 1970)」. COD was measured by alkaline permanganometry method. During the sampling period, temperature ranged from 6.1 to 28.8°C with the lowest temperature at st**. 7** and the highest temperature at st**.** 10; salinity ranged from 29.7 to 34.8 psu. There was no difference salinity between sampling sites but seasonal variation was observed. DO ranged from 5.69 to 10.43; pH from 7.93 to 8.34.; coliforms <1.8 to 4 and fecal coliform <1.8 to 2.0.; and COD from 0.12 to 3.65. Our study showed that Goseong Bay is relatively pristine and meet oyster farming water quality in coliforms, fecal coliform , and COD. However, continuous monitoring on the aquaculture waters is necessary to secure a sustainable farming and food safety.

PP-134

Device for repelling aquatic creature and array comprising the same

Youn Choi*, Heung-Heon Lee and Jeong-kyu Oh
Department of Marine Biotechnology, Kunsan National University

Scuba-divers, swimmers and diving fisherman are often attack by dangerous sharks in an open sea. Attacks by shark are dangerous and usually fatal. For this reason, a device for avoiding such attacks is being developed in this study. It comes from the principal basic idea that electric currents caused by solar panels is consistently being transferred underwater.

In the result of the study, an A4 size solar panel can generates six voltage of current. Tested underwater, a shark with a total length of one meter didn't approach the panel within a radius of two meters. It therefore concludes that attachment of this device to buoys will prevent possible sharks attacks. Technical development of this device such as control of the solar panel's size and mass can produce underwater security for divers from dangerous attacks of sharks in the sea.

PP-135

Biodiversity of fishes in the north eastern Yellow Sea, Korea

Choong-Hoon Jeong[1]*, Yang-Jae Im[2] and Kyung-Nam Han[3]

[1]Ocean Science & Technology Institute, [3]Department of ocean sciences, Inha University

[2]West Sea Fisheries Research Institute, National Fisheries Research & Development Institute

The Yellow Sea (West Sea by Koreans) is a semi-enclosed continental shelf area with about 500,000 km^2, and average water depth of 44 to 55 m (maximum less than 100 m). The north eastern Yellow Sea is fringed by numerous islands and a long stretch of tidal flat along the coast, and having reefs and sandy-muddy bottoms in continental shelves.

This study was conducted to investigate the species composition and distributional patterns of fishes from the north eastern Yellow Sea (West Sea) using fish specimens collected by six kinds of fishing gears from 2004 to 2010. As a results, a total of 123 species collected in this area belonging to 79 genera, 46 families and 14 orders, and occupying 36.3% of the total number of species from the Yellow Sea. Among them, the class Chondrichthyes comprising 3 species, 3 genera, 3 families and 2 orders, and class Osteichthyes comprising 120 species, 79 genera, 43 families and 12 orders. Detailed regional surveys and accounts of fishes will be contributing for a better understanding of the biodiversity from the Yellow Sea. The species list of fishes and its systematics will be presented.

[chjeon@inha.ac.kr; chjeongfish@korea.com]

PP-136

First Record of the Carangid Fish *Scomberoides tol* (Perciformes : Carangidae) from Korea

Seung-ho Choi[1], Heung-heon Lee[2], Yon Choi[3]

[1] Korean Association for Conservation of Freshwater Fish

[2]Institute of Biodiversity Research Center

[3]Faculty of Marine Life Science, Kunsan National University

The one specimen of *Scomberoides tol,* belonging to the family Carangidae were collected from estuary of Ilgwang stream of Gijang-gun, Busan-shi, Korea. The specimen is characterized by having no scutes on the lateral line, and maxillary extending only to posterior rim of pupil. We propose a new Korean name of the genus *Scomberoides*, *S. tol* as respectively Ga-si-jeon-gaeng-i sok and Ga-si-jeon-gaeng-i for the species

PP-137

A Microscopic study on the egg envelope of an endemic Korean fish, *Coreoleuciscus splendidus*

Jong-Sung Park[1*], Jae-Goo Kim[1], Chi-Hong Kim[2]and Jong-young Park[1]

[1]Department of Biological Science and Institute for Biodiversity Research, College of Natural Sciences, Chonbuk National University

[2]Central Inland Fisheries Research Institute

The structure of egg envelope in *Coreoleuciscus splendidus* belonging to Gobioninae was investigated using a light and a scanning electron microscope. Specimens investigated in the present study were collected between June 2011and April 2013, spawning season, in the Han and Mangyung River. Then egg obtained from mature female by abdominal pressure wasartificially fertilized, and was fixed in 10% neutral formalin. For histological examination, their ovaries embedded in paraffin, sectioned 5 ㎛, and stained with hematoxylin-eosin for general histology. As a result, the egg envelope was coveredwith villi with an average thickness of 5.55 ± 0.4 ㎛ (N=40) and an average diameterof 10.63±0.7 ㎛ (N=40). In the light microscope following histologically a process of dyeing with stock solution of hematoxylin after Semi-thin section, the villi of egg envelope showed conical shape(cone-like villi), with an average 5±1.4 in the number of distribution per unit area. From a scanning electron microscopic observation on the surface of the fertilized egg, the villi became shorter as they approach toward the micropyle's region. The villi were unattached to the substrates with no morphological changes whereas the villi attached to the substratesbecame longer and began to fuse each other. The direction of micropyle was rotated counter-clockwise, along an average diameter of 3.75 ㎛ (N=4). Bases on such results, we considered that the egg envelope of *Coreoleuciscus splendidus* preferring the riffles as a spawning ground may be closely related to its ecological habit.

PP-138

The structure of peripheral olfactory organ in Korean amphibious fish, *Periophthalmus modestus* (Pisces, Gobiidae)

Hyun-Tae Kim[1*], Yong-Joo Lee[2], Jong-Young Park[1]

[1]Department of Biological Sciences, College of Natural Sciences, and Institute for Biodiversity Research, Chonbuk National University (ecoscience@chonbuk.ac.kr); [2]Chonju National University of Education

In teleost, olfactory organ performs biologically an important role because it provides ability that fish is able to detect chemical odorants dissolved in the water, and be closely related on morphologically and evolutionally with ecological habits of fish, i.e., in an aspect of homing migration, feeding, reproduction and fright reaction. For the function mentioned above, most fish species have been known to possess rosette-like or lamella structure in olfactory cavity. Accordingly, in fish the structures of the olfactory organ including the shape, arrangement and distributional pattern of receptor cells and morphology of epitheliums, vary uniquely from species to species because there may be environmentally differences between species; this various structures have been used in taxonomic character. But recently no following the structure above, it has been reported that Gobiidae including subfamily Oxudercinae has a distinctive structure characterized by presence of canals and one or two nasal sacs. *Periophthalmus modestus*, mudskipper belonging to Oxudercinae, is distributed from Korea, Japan and China to Taiwan, and has been known to inhabit periodically in between a shallow intertidal mudflat and higher level region. This species is one of mudskippers that are an important group evolutionally on adapted to terrestrial environment. Though studies of skin respiration and aerial vision on the species has been abundantly carried out, but yet little in olfaction. Thus, the characteristics of olfactory organ in *P. modestus* (65.0-77.8 mm SL) were investigated in point of view on the correlation between its habitat and ecological habits. The paired olfactory organs are situated anteriorly in the head consist of the canal and one nasal sac, respectively. The elongated canals which are connected from anterior nostril (0.2-0.36 mm diameter) at the end of upper lip to nasal sac set in each left and right side of snout, and have the sensory epithelium dorsally developed inside the wall. The nasal sac is located little below eye, and has the posterior nostril (0.43-0.78 mm diameter, major axes) that forms a longitudinal slit and drains water outside. Histologically, epithelium area in canal falls into sensory and non-sensory epithelium. The sensory epithelium occurs partly in dorsal part and is separated by indifferent cell while non-sensory occurs mainly in ventral part. On surface of sensory epithelium, a lot of cilia are observed, but no on non-sensory epithelium. From this study, we confirmed that the characteristic of olfactory organ in *P. modestus* is adapted to amphibious life associated with its ecological habits.

PP-139

Structure of egg envelope and oogenesis of *Gobiobotia brevibarba* (Cyprinidae)

Wung Sun Choi[1], Jong Young Park[1], Chi Hong KIm[2]

[1]Faculty of Biological Science and Institute for Biodiversity Research, College of Natural Sciences, Chonbuk National University

[2]Central Inland Fisheries Research Institute

Histological study on egg envelope and oogenesis of *Gobiobotia brevibarba* (Pisces, Cyprinidae) was carried out by a light microscope and a scanning electron microscope.Various developmental cells appeared in ovary of the specimen caught during April 2014. The cytoplasm of oogonia was acidic and many nucleoli were located at the inner side of nuclear membrane. Primary oocyte began to accumulate yolk vesicles.As the developmental stages proceed, secondary oocyte has eosinophilic yolk granules. Yolk granules appeared between the yolk vesicles occupying most cytoplasm, and there are some yolk mass formed already. Envelope of maturation egg investigated by a scanning electron microscope had plenty of microvilli over the entire egg surface.

PP-140

Freshwater fish assemblages according to different geographic regions in Korea

Wan-Ok Lee[1*], Seung-Yoon Jung[1], Kyeong-Hwan Kim[1], and Mi-Young Song[1]

[1]Inland Fisheries Research Institute, National Fisheries Research & Development Institute

We studied the distribution patterns of freshwater fishes in different geographic regions (i.e., western, northern-east and southern area) in Korea. Freshwater fishes were monthly collected in three different regions from April to November 2013. In order to compare the geographic differences among three regions, we conducted cluster analysis based on fish community data. A total of 18 families, 73 species were collected in all the streams. *Zacco platypus* (13.4%) and *Zacco koreanus* (10.0%) were dominant in all the streams. In addition, twenty six endemic species and two exotic species were observed during the study period. Cluster analysis represented the differences of fish community composition among three regions. For instance, Daechon stream (western area) which showed high electric conductivity and salinity were mainly included in cluster 1 and characterized by *Rhodeus uyekii*, *Rhodeus pseudosericeus*, *Hemiculter eigenmanni*, *Cobitis lutheri*, *Odontobutis interrupta*. Deokchon River (southern area) which was characterized by samples with high depth, width and low conductivity were in cluster 2 and mainly had *Acheilognathus koreensis*, *Microphysogobio yaluensis*, *Koreocobitis naktongensis*, *Pseudobagrus brevicorpus*, *Coreoperca herzi*. Lastly, Yeongok stream (northern-east area) which were low depth and conductivity were in cluster 3 and included endemic species including *Tribolodon hakonensis*, *Cobitis pacifica*, *Liobagrus andersoni*, *Pungitius kaibarae*, *Cottus hangiongensis*. Comparison of community structure in different clusters showed that endemic species were divided into three geographic regions.

PP-141

An undescribed snailfish, *Lethotremus* sp. (Scorpaeniformes: Cyclopteridae), from Jeju Strait, Korea

Soo Jeong Lee* and Jin-Koo Kim

Department of Marine Biology, Pukyong National University

An undescribed snailfish, *Lethotremus* sp., collected from Jeju Strait, Korea, is described on the basis of two specimens (standard lengths, 19.7 and 24.8 mm). We compared our species with the two other congeneric species known worldwide, *Lethotremus muticus* and *Lethotremus awae*, using morphological and molecular methods. *Lethotremus* sp. is easily distinguished from *L. muticus* by the number of second dorsal-fin rays (9 in *Lethotremus* sp. versus 11 in *L. muticus*), anal-fin rays (8 versus 10), pectoral-fin rays (21 versus 23) and the presence of barbels on the head (present versus absent). Morphologically, *Lethotremus* sp. is more similar to *L. awae* than to *L. muticus*, but differs from *L. awae* in the presence of plates on the ventral disk (absent in *Lethotremus* sp. versus present in *L. awae*) and the caudal-fin length (32.7-42.1% of standard length (SL) versus 19.5-23.3% of SL). Our molecular analysis based on 375-bp sequences of mitochondrial DNA cytochrome c oxidase subunit I, suggest that our two specimens may be an undescribed species, differing from *L. awae* in Kimura's genetic distances (0.047-0.056).

PP-142

Phylogeographic relationship of the family Odontobutidea in East Asia

Gun young Lee, Jong Yeon Park, Jae Hoon Kim, In Chul Bang*
Life Science and Biotechnology, Soonchenhyang University

Family Odontobutidea consists of three genera (*Micoropercops, Odontobutis* and *Perccotus*) and ten species. Genus *Odontobutis* are including 8 species. In South Korea, *Odontobutis platycephala*, O. *interrupta* and O. *obscura* are distributed, O. *obscura* and O. *hikimius* are distributed in Japan, O. *yaluensis* is distributed in both North Korea and China. O. *sinensis*, O. *potamophila* and O. *haifengensis* are distributed in China. They related closely with evolutional history each other geographically. Compared analysis of the partial nucleotide sequence of mtDNA 12s rRNA gene among 8 species, it was confirmed phylogeographic relationship each species. Sequence information of *O. platycephala, O. interrupta* and *O. obscura* (South Korea) were directly sequenced and the other O*. obscura* (Japan)*,* O*. hikimius,* O*. sinensis,* O*. potamophilia* and *O. haifengensis* were used from the Genbank data. Most species except relationship between O. *hikimius* and O. *obscura* support morphological classification system on GeneTree using Mega 5 program. Genetic distance of O. *interrupta* and O. *yaluensis* is 0.055 to 0.057 appeared most closely, also O. *hikimius* and O. *obscura* in Korea are different in morphology. But, genetic distance was shown 0.066 closely. Otherwise, *O. haifengensis* and *O. platycephala* are shown the longest genetic distance, 0.144 to 0.163. These results were revealed to be the evidence supporting the vicariance hypothesis. However, O. *platycephala* was shown genetically closer O. *sinensis* that is far geographically than O. *interrupta* that is closer geographically. This means that only vicariance hypothesis cannot explain the distribution of family Odontobutidea fishes in East Asia.

PP-143

New Record of the Stone cokscombs *Alectrias alectrolophus* (Perciformes: Stichaeidae) from Gangneung-si, Korea

Hyun-Geun Cho[1*], Seon-Man Kweon[1], Byung-Jik Kim[2], Seul-Yi[1]

[1]Division of Animal Resources, National Institute Biological Resources

[2]Wildlife Genetic Resources Center, National Institute Biological Resources

A single specimen of the stone cockscomb, *Alectrias alectrolophus* (Pallas, 1811) was collected from the shallow waters at about 15m depth off Gangneung-si, East Sea, Korea, using SCUBA gears. This species was widely known from the coasts of the Tartary Strait to east Alaska through the Okhotsk and Bering seas. The present Korean specimen is characterized as having a dermal crest on dorsal median line of head, 63 dorsal fin rays, 45 anal fin rays, 68 vertebrae, slender and flexible dorsal spines in its anterior parts, scales on the posterior portion of body, and fused gill membranes forming a free fold across the isthmus. We report *A. alectrolophus* based on a single specimen collected from the Korean water as the first record from Korea of the species in this study.

PP-144

Diet composition of *Collichthys lucidus* (Richardson, 1844), in the Han River Estuary, Korea

Su-Whan Chung, Byung-Gi Kim, Ji-Hye Kim, Min-Gyu Kim and Kyung-Nam Han*
Department of ocean sciences, Inha University

Collichthys lucidus is a Perciformes Sciaenid fish (Richardson, 1844) that inhabits not only the coast of Korea, the south China sea and the western part of Pacific ocean but also the mouth and middle of a River (Yamada et all., 1995). But, there's no studies of *Collichthys lucidus* that have been accomplished at the Han River Estuary (south Korea, Yellow Sea). That's because this study sets a goal which is a practical use as fundamental data to resources control of Collichthys lucidus by study on the contents of stomach and the food changes following growth of Collichthys lucidus which is a dominant species in the area of Ganghwa Island. In order to study the feeding biology of the *Collichthys lucidus*, the stomach contents of 764 specimens, size range 3.5 - 18.5 cm in total length (TL), captured from the Han River Estuary were analysed. Examination of the feeding selectivity denotes the studied species as a benthivorous predator fish that focuses on active benthic crustaceans, mainly the decapoda *Acetes chinensis*, and *Palaemon carinicauda*. Also pisces contributed in secondary rank in the diet. Overall, 28.93% of the stomachs inspected were empty. Through the study, we could find that Osteichthyes takes firm hold as a kind of food contrary to the existing studies of diet composition. Small vacuity index (VI) shows that they acclimate themselves to a new environment. Little change in the vacuity index was noticed among size classes, but the coefficient showed clear and significant monthly variations. The feeding intensity followed roughly a seasonal trend. Despite the uninform diet composition, seasonal and ontogenetic variations in frequency occurrence were observed for the different prey groups. Prey differences influenced by climatic factors in addition to the spatial and temporal abundance of the benthic sources in the study area. Size differences roughly reflect changing food preference with growth and the ability of large individuals to capture larger prey. The mean weight contents increased significantly for adults fishes, while the mean number of prey items did not show important variations among length classes. The obtained results indicated large diet breadth. *Collichthys lucidus* makes use of a wide array of prey items and could be considered as an opportunistic predator. Through this study, we could presume the quantitative feeding ecology of *Collichthys lucidus* which has high commercial value as Sciaenid fish. We also understand habits of *Collichthys lucidus*, ecological characteristic and species which show high criticality as food.

PP-145

Age and growth of redlip mullet (*Chelon haematocheilus*) in the Han River Estuary, Korea

Min-Gyu Kim, Jong-Wook Kang , Byung-Pyo Kim, Ji-Hye Kim, Su-Whan Chung,
Keon-Sic Choi and Kyung-Nam Han
Department of Ocean Sciences, Inha University

Han river estuary, which is the hotspots of organic matter cycling and their contribution to the exchange of carbon at estuary boundary support biological productivity and food web processes. Because of the estuary consists of flats, these environments are important for a redlip mullet that is deposit feeder. However, fishery resource was decreased as reclaiming work and pollution in the estuary. The research has not been conducted on redlip mullet. In this study, in order to provide the data on the age and growth pattern of redlip mullet in Han river estuary.

The samples were collected monthly, from June 2013 to March 2014 in Han river estuary. For each fish, specimens of redlip mullets measure Body length(BL, 0.1cm), Total weight(TW, 0.1g), Gonad weight(GW, 0.01g). Spawning season estimated from the gonadosometic index(GSI). Otoliths were removed, clean and preserved dry. For age readings, the right-side sagittal otoliths were used for age determination in order to provide consistency in the analysis. The molding process used resins and hardener as the obtained sagittae were mounted and left for 2h in dry oven. The specimens were polished with sandpaper. Age determination was determined from number of scale annuli. Length at age was described by the von Bertalanffy growth function.

The total number of *Chelon haematocheilus* was 525 individuals. The specimens ranged from 6.6 cm to 60.7 cm BL and from 3.9 g to 2824.3 g TW. Body and length relationship was $BW=0.0125\times BL^{3.0161}$($R^2$=0.9908). GSI was decreased Between June and July and raised between February and March. Thus, *Chelon haematocheilus* spawning season was assumed from May to June. Marginal index was rasied on June. Thus an annual opaque ring was made before June. The oldest fish observed in this study was 5 years old for both for females and males. The von Bertalanffy growth curves were $L_t=59.10(1-e^{-0.35(t+0.42)})$ (male : $L_t=61.87(1-e^{-0.32(t+0.36)})$, Female : $L_t=60.62(1-e^{-0.33(t+0.42)})$). The length of redlip mullet each age were 1 age 10.6 cm, 2 age 25.4 cm, 3 age 35.0 cm, 4 age 41.5 cm and 5 age 47.5 cm. This study contributes the redlip mullet management in Han river.

PP-146

The correlation between bioaccumulation and pattern of stress related genes expression of black sea bream(*Acanthopagrus schlegeli*) by cadmium exposure.

Yong Kim, Ho-Ra Park, Won-Jun Yeo, Sun-Sik Lee, and Kyung-Nam Han*
Department of Ocean Science, InhaUniversity

After rapid industrialization, heavy metal pollution has adversely affected on ecosystem. The adverse effects by heavy metals on the ecosystem is gradually more increased. The toxic effects of heavy metals should be considered in respect of the bioaccumulation because fish could be influenced with ease on toxicological effect such as abnormality, oxidative stress, mortality in marine ecosystems. Thus, the purpose of this study is identifying the correlation between bioaccumulation of cadmium and pattern of expression of stress related genes in the liver of black sea bream (*Acanthopagrus schlegeli*).

Tested black sea bream larvae (n = 15 for each concentration) were exposed to five concentration of cadmium (control, 2, 4, 7, 13, 25 mg L-1) and exposure duration of 0, 24, 48, 72, 96hr by addition of cadmium from 50 liter aquariums prepared in seawater. The bioaccumulation of cadmium was analyzed by using ICP-MS and Stress related genes expression analysis were performed using RT-PCR method. Used genes as stress related genes in this study are Metallothionein(MT), Cytochrome P450 1A1(CYP1A1), Glutathione Peroxidase(GPx), Cu/Zn^+ Superoxide dismutase(Cu/Zn^+ SOD).

After MT mRNA expression level is drastically increased at exposure initial(12, 24hr), it was presented decrease tendency until 96hr exposure. CYP1A1 and GPx showed similar pattern, but especially expression level of GPx revealed basal level with gradually decreased. By contrast, SOD gene expression had a positive correlation with cadmium concentration.

In conclusion, we demonstrated bioaccumulation of cadmium increased drastically as MT and CYP1A1 expression level declined in black sea bream. We also showed that as bioaccumulation of cadmium increase, so SOD mRNA expression upregulate by oxidative stress.

PP-147

Isolation and Characateristics of *Aeromonas sobria* from Cultured Mud loach (*Misgrurunus anguillicautatus*)

°Sung-Woo Park[1], Dong-Wan Kim[2], Bon-Hyung Koo[1]

[1]Dept. Aquatic Life Med., Kunsan Univ., [2]Tongkyung Microbiology Co.

◎ Background:

Flavobacteriumcolumnare (Wakabayashi &Egusa, 1966; 1967), *Streptococcus epidermis* (Park et al., 2002), *Aeromonashydrophila* (Kumakawa, 2009), *Aeromonassobria* (Yu & Park, 2008; Yao et al., 2010) and *Vibrio cholreae* (Zhang et al, 2012) have been known at common bacterial diseases in farmed mud loaches. In 2012, mass mortality of mud loach occurred on a loach farm situated in JonNam, Korea. The mortality rates per day reached up to approximately 1.2% and average cumulative mortality was 10%. The diseased fish appeared on the fourth day after transplantation to the farm. Affected fish showed hemorrhagic ulcers on head regions and haemorrhage in operculum. The motile aeromonads(Gram negative rod) are one of the ubiquitous members of the aquatic ecosystem and can be pathogenic agent of epizootic ulcerative syndrome, haemorrhagicsepticaemia and fins rots (Austin & Adams 1996; Austin & Austin 2007). The aim of the present study was to isolate the causative agent from affected fish and confirm the biochemical characteristics and aerolysine gene possession of the isolate.

◎ Materials and Methods

For bacteriological analysis, tissues of the liver, spleen, kidney and brain from diseased fish were inoculated on brain heart infusion agar (BHIA). After incubation at 25℃ for 48h, a dominant colony on BHIA was re-streaked onto BHIA to obtain a pure isolate. The isolate was identified using API 20E and 50CHE system (BioMérieux, USA) following 24 h incubation at 25°C. For aerolysine genes of *A. sobria*, SOBF (5'-GCA ACC AAC TAC ACC GAC CTG-3') and SOBB (5'-GGA CTT GTA GAG GGC AAC CCG-3') were used as specific primers designed by Filler et al(2000). PCR products were analysed by gel electrophoresis in 1.5% (w/v) agarose gel and the amplicons at 288 bp were detected. For control strains, ATCC700183(*A. hydrophila*), ATCC43979(*A. sobria*) and isolated strains as *A. sobria* from mud loach liver (DJ-1) were used.

◎ Results and Discussion

Pure bacterial isolates were obtained after a 48-h incubation with round and small punctate colonies on BHIA medium. Using the API system, the isolate was found to belong to the group of *A. sobria* (99.3%). The isolated strain, ATCC43979, and DJ-1 generated 288 bp fragments fortheaerolysine gene, while ATCC700183 did not. Thus, the isolate from diseased fish was identified as *A. sobria.*

PP-148

Pathogenic potentials of two sibling anisakid nematodes: *Anisakis simplex* (sensustricto) *and Anisakis pegreffii*

°Chan-Hyeok Jeon, Seong-Wi, Jeong-Ho Kim

Department of Marine Bioscience, Gangneung-Wonju National University, Gangneung, Korea

Anisakidosis occurs by ingesting the raw or undercooked fish harboring anisakid nematode larvae, and most of infections are known to be caused by *Anisakis simplex* (sensustricto). Although *A. simplex* (s.s.) and its sibling species*, A. pegreffii* exist in Korean waters, only *A. simplex*(s.s.) is known to cause anisakidosis. In this study, invasion ability and viability of these 2 species was compared *in vitro*, using agar blocks. In addition, migration pattern was compared *in vivo*, using rats. Live nematodes were isolated from chum salmon and chub mackerel, and all of them were identified by PCR-RFLP after the experiments. For invasiveness experiment *in vitro*, 2 different agar blocks (agar, agar+RPMI 1640) with 4 different supernatants (PBS, artificial gastric juice, RPMI-1640, artificial intestinal fluid) were used. For viability test *in vitro*, artificial gastric juice and PBS were used. For *in vivo* test, live *A. simplex* (s.s.) and *A. pegreffii* were intubated to rats and their migration pattern was investigated. After 48 hrs, *A. pegreffii* invaded into agar block more effectively than *A.simplex* (s.s.) (50.0~83.3% vs 43.3~60.0%), regardless of supernatant. For RPMI 1640+agar block*, A.simplex* (s.s.) was more invasive than *A. pegreffii*. (75.0~78.3% vs 46.7~71.7%). For viability test in artificial gastric juice, the survival rate after 7 days was longer for *A. simplex* (s.s.) than *A. pegreffii* (3.3% vs 0%). For *in vivo* test, *A. pegreffii*was found more frequently in intestinal organs or abdominal cavity than *A. simplex* (s.s.) (63.6% vs 46.9%). From these results, both *Anisakis*species are thought to be able to cause problems when ingested. But other mechanisms can be possibly involved in the pathogenesis of anisakidosis in human because currently most of the anisakidosis are known to be caused by *A. simplex* (s.s.). Further studies are necessary to reveal the mechanisms behind these differences.

PP-149

Residues of Oxytetracycline and Neomycin Mixtures in Olive Flounder (*Paralichthys olivaceus*) Following immersion.

°Seung Min Kim, Lyu Jin Jun, Hyun Kyung Park, Myung Lip Lee, Da Won Lee, and Joon Bum Jeong

School of Marine Biomedical Sciences, College of Ocean Science & Marine and Environmental Research Institute, Jeju National University, Jeju 690-756, Korea

The withdrawal time of oxytetracycline and neomycin mixtures in cultured olive flounder was investigated to ensure the food safety of the fish treated with oxytetracycline(250g/1kg) and neomycin(100g/1kg) mixtures. The immersion of oxytetracycline and neomycin mixtures (100, 200g/ton- two groups) were executed 3 h each day for 2 days dose of 70g/kg body weight. The Samples were taken at 1, 5, 14 and 40 days of post-dose antibiotics and 10 fish was sampled for each test group. Oxytetracycline and neomycin concentrations were analyzed by high performance liquid chromatography(HPLC). Correlation coefficients of standard curves for individual oxytetracycline and neomycin isolated from fortified samples were linear (0.9996 ± 0.0001- 0.9999 ± 0.0001, 0.9964 ± 0.0016 - 0.9998 ±0.0001) respectively. The average recovery rates of oxytetracycline and neomycin in fish samples ranged from 83~99% and 90~105%, respectively. After one day, the residual amount of oxytetracycline in the tissue of olive flounder was 0.97±0.08ppm(100g) and 1.32±0.06ppm(200g), respectively. The concentration of oxytetracycline was not detected at 5 days after administration. The residual amount of neomycin at one day was 0.12±0.08ppm(100g) and 0.79±0.05ppm(200g), respectively. After 5days, the neomycin was not detected in the tissue of olive flounder. From these results we suggest that recommended withdrawal periods should be 5 days for oxytetracycline and neomycin in the olive flounder.

PP-150

Real-time PCR assay using *groEL* gene for the detection and quantification of *Vibrio alginolyticus* from shellfish and shrimp

Raju Ahmed, S. M. Rafiquzzaman, Jong Min Lee, Gyuyou Noh, Geon-a Jo, Dong Seop Kang and In-Soo Kong*

Department of Biotechnology, Pukyong National University, Busan 608-737, Korea

*Corresponding author: iskong@pknu.ac.kr (In-Soo Kong)

V. alginolyticus is an important opportunistic halophilic pathogen for human as well as marine aquatic animals. Culture based method and even traditional PCR can not quantify the pathogen with enough sensitivity. A reliable detection with rapidity and accuracy, and quantification method are essential for prevention and control of pathogenic *V. alginolyticus*. A real-time quantitative PCR assay was developed using SYBR Green I targeting *groEL* gene for detection and quantification of *V. alginolyticus*. A species-specific primer was designed based on *groEL* gene. Specificity of the primer was confirmed using three *V. alginolyticus* strains and 28 other vibrio and non-vibrio strains.

Only *V. alginolyticus* strains showed positive result in the specificity test. The result of the melting curve analysis showed only a specific peak with a melting temperature of 85.80±0.15ºC and no primer-dimer was observed. A standard curve was formed to quantify the target organism. The detection sensitivity was found to be 0.14 pg of genomic DNA equivalent to 10 cells per ml for pure culture of *V. alginolyticus*. To evaluate the applicability of the developed assay, *V. alginolyticus* was detected and quantified from artificially inoculated shellfish and alive shrimp. The data showed that the quantity of target organism increased with time. Results indicated that SYBR Green I based qRT-PCR targeting *groEL* gene developed in this research was accurate, sensitive, and rapid for the detection and quantification of *V. alginolyticus* from shellfish and shrimp.

PP-151

Effect of ^{60}Co gamma Irradiation on growth rate and environment tolerance of Disk abalone, *Haliotis discus discus*.

°Min-Seok Jwa[1], Hye-na Moon[2], Jin Namgung[2], Hye-rim Yang[2] and In-kyu yeo[2]

[1]Jeju special self-governing province Ocean and Fisheries Research Institute

[2]Department of Marine life Science, Jeju National University

◎ Background (or Objective) of This Study : Radiation breeding is the way which processes low dose radiation by causing hormesis for improve the short-comings of the existing species and promote a better trait artificially. Abalone is useful aquaculture species, however, it is also sensitive for environment changes. Recently, various problems have occurred because of low salinity and high water temperature in the farming of abalone. In this study, we used Disk abalone (*H.discus discus*) in order to measure irradiation between 10 ~ 25 Gy ^{60}Co gamma irradiation, after that, gene ontogeny expression analysis of each growth rate, water temperature and salinity resistance were investigated.

◎ Methods : The materials for the immune gene expression were selected 25 entities that had survived the stress for water temperature and salinity. Growth gene expression experiment, the 25 entities that had the fastest growth rate were selected respectively from those spats from the control, 10 Gy, 15 Gy and 20 Gy. As for the sampling, the gill tissue of 3 selected entities were collected respectively. The oligonucleotide primer as to Myostatin, Caspase-8 and HSP-70 mRNA was fabricated and synthesized. And β-actin mRNA was produced to be used as a positive control and then analysed RT-PCR.

◎ Results & Discussion : The expression of Caspase-8 mRNA that was immune gene expression was found in all the experimental plots. Also, it was possible to confirm that the expression level was higher in the 10 Gy group than the other group. The expression of Myostatin mRNA that was growth gene was not found in the control, however, it could be confirmed that it was expressed at a high level in the gamma ray 15 Gy and 20 Gy groups. Moreover, it could be confirmed that the expression of heat shock protein (HSP 70) mRNA that was the stress protein was found in the 15 Gy group for water temperature and the 10 Gy group for salinity. It is believed that the experimental plot that had been irradiated with gamma ray of 15 Gy had a better environmental tolerance at 30℃ as for the stress for water temperature, whereas the experimental plot that had been irradiated with gamma ray of 10 Gy at 25 psu as for the stress for salinity had a better self-immune mechanism ability.

PP-152

Isolation and characterization of lytic bacteriophage (PAsm-1) against *Aeromonas salmonicida mosoucida*

°Maheswaran Easwaran[1], Jin-young Choi[1],G.L. Godahewa[2],Hyun-Jin Shin[1],Jehee Lee[2] and Mahanama De Zoysa[1*]

[1*]College of Veterinary Medicine, Chungnam National University, Yuseong-Gu, Daejeon, 305-764

[2]Department of Marine Life Sciences, Jeju National University, Jeju Special Self-Governing Province, 690-756

A lytic phage designated as PAsm-1wasisolated from the fish culturing water after enrichment process with *Aeromonassalmonicidamosoucida*.Conventional double-layered agar method was used for phage isolation. Transmission electron microscope (TEM) image results showed that PAsm-1 has icosahedral head and contracted tail suggesting that isolated phage belonged to the family Myoviridae. Host range identification results indicate that PAsm-1 can infect only *A. salmonicidamosoucida*but not any of the 5 Aeromonasspecies tested. Restriction enzyme digestion result clearly shows that PAsm-1 genome is fragmented by PstI, KpnI, NcoI, BamHI, EcoRI, and HindIII and estimated the approximate genome size as 100 Kbp. When PAsm-1 was added early 2 h to *A. salmonicida*mosoucidaculture, the exponential growth was delayed and inhibited compared to bacteria culture without PAsm-1. Furthermore, PAsm-1 could not prevent the overall growth of the bacterial strain which could be due to development of phage resistant. Although PAsm-1shows narrow host range and low infectivity it could be applied for preparing phage cocktail to control *A. salmonicidamosoucida*andfurther studies are required to expand the host range and therapeutic potential.

PP-153

Distribution of MIC value for quinolones in *Streptococcus parauberis* isolated from diseased fish in Korea

°JiWoong Jin, Hye Sung Choi, Sung Hee Jung and MyoungSug Kim
Pathology Division, National Fisheries Research and Development Institute, Busan 619-902, Korea

Streptococcosis has become a major problem in Korea aquaculture industry. The major species responsible for this disease include *Streptococcus parauberis*, *Streptococcus iniae* and*Lactococcusgarvieae*.The quinolones are a family of synthetic broad-spectrum antibacterial drugs. The majority of quinolones in clinical use belong to the subset fluoroquinolones, which are included flumequine, ciprofloxacin, enrofloxacin and norfloxacin.Currently,quinolone resistant bacteria ratio was relatively low, so it ispreference drugs for treating fishes infected by *Streptococcus* spp. in Korea. Especially, enrofloxacin and flumequine has been approved using as possible to the cultured fishes for bacterial disease treatment in Korea. But, no criteria have been established for interpretingthe minimum inhibitory concentration (MIC) test results in aquatic pathogens. Thus, we examined the MIC test for quinolonesand confirmed mutationsin quinolone resistance determining region (QRDR) in *S. parauberis* isolated from cultured fishes.Identification of epidemiologic bacteria were conducted with PCR using *S. parauberis*discriminative primers and 16s ribosomal RNA gene sequence. So, we were isolated151*S. parauberis* obtained from aquaculture farms in diseased fishes on the Korea between 2004 and 2013. MIC test for quinolones(ciprofloxacin, enrofloxacin, norfloxacin and flumequine) and determined by quality control and reference guidelines for CLSI broth microdilutionsusceptibility methods. As a result, it is possible to confirm that the MIC values of *S. parauberis*are increasing recently. Mutant strains of QRDR (gyrA,gyrB,parC and parE) were also increased. So we need to reduce antibiotic use and need for appropriate vaccines to prevent resistant strain.

PP-154

Lepeophtheirus elegans (Caligidae), a serious pest of cultured Korean rockfish *Sebastes schlegelii* (Hilgendorf, 1880) (Sebastidae)

°B. A. Venmathi Maran*, Sung-Yong Oh, Hee Jung Choi,
and Jung-Goo Myoung
Marine Ecosystem Research Division,
Korea Institute of Ocean Science & Technology, Ansan
*bavmaran@gmail.com

Sea lice (Copepoda, Siphonostomatoida, Caligidae) are known to be pests of cultured fish, since they cause serious diseases and economic losses in fish aquaculture worldwide. In Korea, sea cage aquaculture is flourishing for the last two decades. At present in Korea, the major species cultured in sea cages are the olive flounders and the Korean rockfish. In this study, we focused on the sea lice infection on the ranched Korean rockfish. The sea louse *Lepeophtheirus elegans* Gusev, 1951 (Copepoda: Caligidae) was found to be severely infected on the highly prized Korean rockfish *Sebastes schlegelii* (Hilgendorf, 1880) (Sebastidae). Sampling was carried out at Tongyeong marine living resources research & conservation center as 5 per month (ranging from 10 to 26 cm in total length), which were found with the severe infection of *L. elegans* (n = 441) on the body surface and fins. Adult ovigerous females (66), non-ovigerous females (72), adult males (83) and preadult II (64) stages were collected from the body surface; preadult I (41), chalimi I-II (104) and copepodid (11) stages from the fins. Prevalence was recorded as 98.8%, mean intensity was 7.35 and the maximum number of individuals per host was 29. The severe infection of *L. elegans* (29 from one host) and other parasitic copepods such as *Clavella parva* Wilson, 1912 (Lernaeopodidae), *Peniculus truncatus* Shiino, 1954 (Pennellidae) and monogeneans (Platyhelminthes) could make fish become more lethargic and cause secondary infection. All developmental stages of *L. elegans* have been recovered from the same host. It can be considered as a pest of Korean rockfish in Korea.

PP-155

Preparation of RSIV recombinant proteins and a rabbit polyclonal antibody against rock bream Immunoglobulin for serological test

°Jeong Su Park[1], Hyoung Jun Kim[2],Minchul Choi[3],Haeng Lim Lee[1], Se Ryun Kwon[1]*

[1]Department of Aquatic Life Medical Sciences, SunmoonUniversity
[2]National Fishery Products Quality Management Services, Main Office
[3]Incheon Fisheries Research Institute

Red seabreamiridovirus disease (RSIVD), an acute and highly contagious disease, is caused by red sea bream iridovirus (RSIV) which is large, icosahedral, cytoplasmic DNA virus and belongs to the family Iridoviridae, Genus Megalocytivirus. Until now, RSIVD has been reported for 31 species of cultured marine fishes and showed severe anemia with 20-60 % mortality. In this study, major capsid protein (MCP) and ORF 351R of red seabreamiridovirus (RSIV) were expressed in an *Escherichia coli* expression system for subsequent immunological studies. Genes coding MCP were amplified by specific primers 5'-CAT ATG TCT GCA ATC TCA GGT GCG T-3' and 5'-CTC GAG CAG GAT AGG GAA GCC TGC AG-3'. Genes coding ORF 351R were amplified by specific primers 5'-CGC CAT ATG GAC TAT ATT GCT GAG CT-3' and 5'-GCT CGA GTT GTG TTTTAT AAT ACA GCT TGA T-3'.Each gene was cloned in *Nde*I/*Xho*I-digested pET21a vector. Expression of pET21-MCP and pET21-351R was performed in *E. coli*BL21(DE3) stain. Each recombinant MCP and ORF 351R was observed at the expected sizes in a SDS-PAGE gel. Expression of recombinant MCP was observed in LB medium containing 1mM, 0.1mM, 0.01mM IPTG. Recombinant 351R was expressed in every concentrations of IPTG but the strongest intensity was observed in medium containing 0.01mM IPTG at 12 hr. It has been well known that cell culture of RSIV is fastidious. Culture supernatants have small amount of virus while a lot of miscellaneous proteins like FBS, casing non-specific responses in ELISA. Therefore, it was tested whether RSIV recombinant proteins are useful for serological test. In this study, we also purified the rock bream immunoglobulins (Ig) using staphylococcal protein A affinity chromatography. The polyclonal antibody was prepared by immunizing 4-week-old New Zealand rabbit with purified rock bream Ig followed by three boosting at 2 weeks intervals.

PP-156

Molecular profile and transcriptional analysis of a potent antimicrobial agent, identified from rock bream (*oplegnathus fasciatus*).

°Don Anushka Sandaruwan Elvitigala[1,2], and Jehee Lee[1,2]

[1]Department of Marine Life Sciences, School of Marine Biomedical Sciences, Jeju National University, Jeju Self-Governing Province 690-756, Republic of Korea

[2]Fish Vaccine Development Center, Jeju National University, Jeju Special Self-Governing Province 690-756, Republic of Korea

Rock bream (*Oplegnathus fasciatus*) is as an economically important fish comestible produced through Asian mariculture industry. However, annual yield of rock bream have found to decline significantly in last couple of years, prominently due to pathogen infections. In this regard gaining insights into immunologically relevant genes of rock bream triggers an important necessity in developing proper disease management strategies. In this study we identified and molecularly characterized a novel counterpart of myeloperoxidase (MPO) from rock bream (RbMPO). According to our sequence analysis, complete cDNA sequence of *RbMPO* was consisted of 2947 nucleotides, with a 2655 bp coding region which encodes an 884 amino acid protein with a predicted molecular mass of 99.7 kDa. As per the results of *in-silico* analysis, RbMPO which was found to bear a signal peptide (22 amino acids) resembled the typical domain architecture of heme peroxidase superfamily, further comprising putative pro-domain, small and large subunits. Additionally, it also appears to have a C1q domain (127 amino acids). Sequence comparison of RbMPO with known homologues shows that it shares substantial similarity and identity with its fish counterparts and most of the cys residues in heme linkage sites along with active site motifs are well conserved. Phylogenetic reconstruction of RbMPO generated with its homologs markedly convinces it's indeed homology with known MPO counterparts, especially with fish counterparts, further affirming its vertebrate ancestral origin. RbMPO was found to express ubiquitously in physiologically important tissues in rock bream at its mRNA level, prominently in blood. Upon the stimulation with live bacterial pathogens, *Edwardsiella tarda* and *Streptococcus iniae* basal transcript level of *RbMPO* in gill tissues was detected to be modulated significantly from 12 h post stimulation (p.s). However, RbMPO expression was elevated early phase (6 h p.s.) after the stimulation, when the fish were treated with pathogen derived mitogens; lipopolysaccharides and Poly I;C. Altogether these results suggests that RbMPO may actively participate in host antimicrobial defense. However, further studies on functionality of RbMPO including its potential antimicrobial activity and peroxidase activity are yet to be performed using its recombinantly expressed protein.

PP-157

C-type lectin from sea horse(*Hippocampus Abdominalis*); molecular characterization and transcriptional profiling

°Eunyoung jo, Wan Qiang, Don Anushka Sandaruwan Elvitigala and Jehee Lee
Department of Marine Life Science, School of Biomedical Sciences, Jeju National University, Jeju Special Self-Governing Province, 690-756, Republic of Korea

Lectins are sugar-binding proteins that recognize carbohydrate structures on the surface of microbial invaders and play an important role in self/non-self discrimination of innate immunity. Lectins are classified as C-type lectins, galectins, I-type lectins, P-type lectins, F-type lectins, pentraxins, and others. C-type lectins (CTLs) are originally named as a cluster of ca^{2+}-dependent(C-type) carbohydrate-binding proteins which are the most well-studied lectin family and have immune functions against invaders. These proteins are consisted of at least one carbohydrate recognition domains (CRDs). In each CRD, there are four ca^{2+}-binding site; among which the site 2 is conserved and be involved in carbohydrate binding. In this study, we molecularly characterized C-type lectin from *Hippocampus Abdominalis* designated as HaCTL. The full length cDNA sequence of HaCTL was 1633 bp in length with an open reading frame (ORF) of 1386 bp, 5'- untranslted region(-UTR) of 164 bp and 3'-UTRof 80bp. The ORF encode a protein of 462amino acids prossessing molecular mass of 52.6kDa and isoelectric point of 8.26.Pairwise alignment analysis of the HaCTL protein sequence with other homologues from O*plegnathus fasciatus, Dicentrarchus labrax, Haplochromis burtoni, Maylandia zebra* and *Oreochromis niloticus* showed that HaCTL shared 61.6%, 59.6%, 53.1%, 52.9%, 52.3% identity valuses, respectively. The SMART online program predicted that HaCTL contains a 125 amino acid CRD and Multiple alignment of the selected c-type lecitns showed that they had QPN motif in ca^{2+}-binding site 2. We examined the expression pattern of HaCTL in both healthy and immune-challenged seahorse by quantitative real-time PCR. Highest level of expression was observed in kidney, gill and blood of healthy seahorse. Furthermore, up-regulated in different tissues after bacterial injection. This study suggest that HaCTL palys an important role in the bacteria defense of seahorse.

PP-158

Genomic identification,molecular insights and transcriptional regulation of complement C1r counterpart from rock bream (*Oplegnathus fasciatus*)

°G. I. Godahewa, S. D. N. K. Bathige and Jehee Lee

Department of Marine Life Science, School of Biomedical Sciences, Jeju National University, Jeju Special Self-Governing Province, 690-756, Republic of Korea

The complement system possesses an important constituent of immunological defense against pathogens. Complement 1 (C1) is initial triggering component of classical pathway, comprising one recognition subunit (C1q), two catalytic subunits (C1r) and two second catalytic subunits (C1s). C1r plays a crucial role in the cascade through auto activation and subsequent cleavage and activation of C1s in order to achieve the function of C1 complex. In the current study, we report a C1r from rock bream *Oplegnathus fasciatus* (RbC1r) and characterized it at genomic and molecular levels. The genomic sequence was identified from rock bream BAC library and full-length cDNA sequence of RbC1rwas identified from rock bream cDNA database. *In silico* analysis was performed by using molecular biological software and other web base servers. The expression analysis of *RbC1r* transcript was done by performing quantitative real time PCR (qPCR). Putative RbC1r genomic sequence was comprised of 13 exons with 12 intervening introns and cDNA was2533bpin length and possessed a CDS of 2112 bp encoding a peptide of 704 amino acids (78 kDa) with a signal peptide. Mature RbC1r contained N- and C-terminal domains, which are two CUB domains and calcium binding EGF domain found in N-terminal region. Two CCP domains and serine protease trypsin domain were also predicted In C-terminal region. Our phylogenetic study showed that fish C1rs are somewhat distinct from non-fish members except coelacanth, based on the clustering pattern. Evolutionary wise and protein sequence identity wise (73.4%), RbC1r was more compatible with *Pundamilia nyererei* C1r. These evidences suggested that the identified gene in the current study is C1r of rock bream fish. Tissue mRNA distribution of *RbC1r* demonstrated that it was constitutively transcribed with blood and liver tissues showing the highest mRNA level. As a primary synthesis tissue of the C1r, liver has shown early up regulation pattern of *RbC1r* transcripts against the *Edwardsiella tarda* and *Streptococcus iniae*. In conclusion, we have identified and characterized a teleostean C1r from rock bream. The deduced protein and genomic structure were characterized at *in silico* level. Tissue mRNA distribution was examined upon the bacterial pathogenic infections. Collectively, our results suggested a potential immune regulatory activity for rock bream C1r.

PP-159

Tissue specific expression analysis and molecular insights of the iron binding blood plasma glycoprotein in rock bream (*Oplegnathus fasciatus*)

°G. I. Godahewa[1],Mahanama De Zoysa[2] and Jehee Lee[1]

[1]Department of Marine Life Science, School of Biomedical Sciences, Jeju National University, Jeju Special Self-Governing Province, 690-756, Republic of Korea

[2]College of Veterinary Medicine, Chungnam National University, Yuseong-gu, Daejeon 305-764, Republic of Korea

Transferrins (Tfs) are group of glycoproteins encounter in blood plasma, which possesses the iron homeostasis. Tfs comprises N and C terminal lobes with conserved iron binding sites and its associated with innate immune system as cease the invading pathogen of iron necessitate for their survival and proliferation, by binding to the freely available iron. Hence, study of *RbTf* is important for understand the expression and iron dependent pathogen regulatory mechanism in fish. In this study, a full-length cDNA sequence of *RbTf* was identified from rock bream cDNA database and genomic sequence was identified from rock bream BAC library. *In silico* analysis was performed by using molecular biological software and other web base servers such as DNAssist v2.2 program, MEGA 5.05 program with neighbor joining method. As well as multiple sequences alignment was performed using Color Align Conservation program. The expression analysis of *RbTf* transcript was done by performing quantitative real time PCR (qPCR). A 2401bp full-length cDNA consisted of 2079bp open reading frame (ORF) which encoded for a 693 amino acids. It has 74 kDa molecular mass and comprises 5.4 isoelectric point. Several conserved regions were identified with the comparison of other known Tf orthologs. The putative polypeptide is consisted of a 18 amino acid signal peptide, N-terminal Tf lobe and C-terminal Tf lobe domains, Tf like 1 domain signature, two of Tf like 2 domain signatures, Tf like 3 domain signature and polyadenylation signal. Furthermore, pairwise comparison analysis was shown higher identities (82.6 %) and similarities (88.8 %) of *RbTf* with European seabass (*Dicentrarchus labrax*). Moreover, evolutionary relation analysis has shown *RbTf* clade into teleost group within the order perciformes. Furthermore, *RbTf* has close evolutionary relation with *D.labrax*. Tissue expression studies revealed that *RbTf* was predominantly expressed in liver tissue. As a response of liver tissue challenge experiments, *RbTf* mRNA was up-regulated gradually from 0 h to 48 h post challenge while predominantly expressed at 48 h with respect to rock bream iridovirus, *Edwardsiella tarda* and *Streptococcus iniae*. Though, *RbTf* mRNA was significantly up-regulated at 12 h post infection upon Lipopolysaccharide (LPS) and *RbTf* has shown up-regulation of mRNA at 3 h & 48 h upon PolyIC infection. These findings suggesting an immune role of *RbTf* in rock bream fish.

PP-160

Molecular insights into an iron regulator, identified from disk abalone (*Haliotis discus discus*).

°H.M.L.P.B. Herath, Don Anushka Sandaruwan Elvitigala, and Je hee Lee
Department of Marine Life Sciences, School of Marine Biomedical Sciences, Jeju National University, Jeju Self-Governing Province 690-756, Republic of Korea

Transferrin is an omnipresent iron binding protein in both invertebrates and vertebrates. It is known to involve in innate immunity via iron binding ability. In this studies, a putative transferrin similitude (Abtrf) was identified from our disk abalone cDNA library. The full length coding region of Abtrf was consisted of 2190 nucleotides encodes for a 728 amino acids, with a signal peptide sequence of 19 a.a. Molecular weight of Abtrf is approximately 80kD and isoelectric point is 8.5. The amino acid sequence also resembled the typical and conserved features of the transferrin protein including, two identical N terminal and C terminal domains, which are connected by a small peptide bridge with a conserved cleavage peptide region as predicted by the NCBI-conserved domain database server. Abtrf exhibited the closest evolutionary proximity with the transferrin member from Japanese sea cucumber. (*Apostichopus japonicus*), revealed by our phylogenetic analysis. The *Abtrf transcription* in healthy abalones was detected to have ubiquitous distribution in 9 different tissues examined, where mantle and muscle showed highest expressions levels. Moreover, two separate immune challenges were conducted in order to monitor the expression levels of Abtrf upon a pathogenic condition. The Abtrf transcriptional profile in gills of abalone challenged with *Vibrio parahaemolyticus* and lipopolysaccharides (LPS) demonstrated significant up-regulations at 24 h and 48 h post-injection (p.i.), respectively. These findings suggest that Abtrf may play a role under pathological conditions in disk abalone. However, further analysis on genomic sequence and the functional properties is yet to be carried out in our future studies.

PP-161

Molecular characterization and immune response against viral hemorrhagic septicemia virus infection of caveolin 1 in disk abalone, *Haliotis discus discus.*

°H.M.V.Udayantha[1], S.D.N.K. Bathige[1], Yucheol Kim[1], ThanthrigeThiunuwan Priyathilaka[1], UduwarageItan Lakshan perera[1], Hyowon Kim[1],Hyungbok Jeong[2] , Seongil Kang[2], Changnam Jin[2], Jehee Lee[1]and Bongsoo Lim[2]

[1]Department of Marine Life Sciences, School of Marine Biomedical Sciences, Jeju National University, Jeju Self-Governing Province 690-756, Republic of Korea

[2]Fish Vaccine Research Center, Jeju Self-Governing province, 690-814, Republic of Korea

Caveolin 1 (Cav 1) is an indispensable membrane protein belongs to a family of small proteins (18–24 kDa) and coupled with cell membrane micro domains in many cell types. Cav 1 is a scaffold protein that essential constituent of caveolae and functioning as membrane trafficking, signal transduction, substrate transport and endocytosis. In this study we reported the molecular characterization and immune responses of Cav1 homolog from disk abalone, *Haliotis discus discus* (AbCav1). The full length cDNA of AbCav1 contains 826bp while ORF consists with 381bp. Molecular weight of the AbCav1 is 15kDwith theoretical isoelectric point of 5.4.Characteristic caveolin domain was identified from 1 to 127 amino acid residues. EMBOSS Needle showed that AbCav1 shared high identity with Cav1 of *Aplysia cacalifornica* (50.8%) and *Crassostrea gigas* (48.5%) respectively. According to the Neighbor-Joining phylogenetic study all selected mollusks were clustered in a same branch of the evolution. Therefore, all these findings collectively suggested that AbCav1 belongs to the same family of the Caveolin. In the normal tissue distribution results of qPCR indicates that constitutive expression of AbCal1 was mainly expressed in gill tissue compare to the other seven tissues (mantle, hepatopancreas, muscle, digestive tract, gills, hemocytes, gonads and tentacles). In the viral challenge (viral hemorrhagic septicemia virus) experiment, the significant ($P<0.05$) up-regulation of AbCav1 was observed in gill tissue. These results indicate that AbCav1 might be involved in the potential immune responses against viral infection in order to protect the disk abalone.

PP-162

MOLECULAR PROFILING OF A PUTATIVE SIMILITUDE OF OXIDATIVE DAMAGE REPAIRER, IDENTIFIED FROM ROCK BREAM *Oplegnathus fasciatus*.

°Hyowon Kim[1], Don Anushka Sandaruwan Elvitigala,Yucheol Kim, Seongdo Lee, Thanthrige Thiunuwan Priyathilaka[1], U. I. L. Perera, Hyungbok Jeong[2] , Seongil Kang[2], Changnam Jin[2,] Bongsoo Lim[2] and Jehee Lee[1]

[1]Department of Marine Life Sciences, School of Marine Biomedical Sciences, Jeju National University, Jeju Self-Governing province,690-756, Republic of Korea

[2] Fish Vaccine Research Center, Jeju Self-Governing province, 690-814, Republic of Korea

Oxidative stress is basically mounted by excessive production of reactive oxygen species, which can be trigged by different environmental stress factors including pathogen stress. This condition can negatively affect the survival of organisms since it can elicit several deleterious effects including deterioration of important biomolecules in cell membranes. One of the prominent industries affected by environmental factors is aquaculture industry, in which culture crops are highly vulnerable to the conditions like oxidative stress; which in turn can reduce the quality and quantity of their yield. Therefore, investigation of natural anti-oxidative defense mechanisms of aqua-crops, gaining insights into molecular level is important in building up a sustainable aquaculture industry with tolerable culture-species. Rock bream (*Oplegnathus fasciatus*) is as an economically important fish comestible produced through Asian mariculture industry. However, annual yield of rock bream have found to drop down significantly in last couple of years, prominently due to pathogen infections and other environmental stress factors. In this study we identified and molecularly characterized a novel counterpart of Methonine sulfoxide reductase-Aepimor (MSRA) from rock bream. MSRs are known to involve in repairing oxidatively damaged methionine (Met) residues in proteins by reducing methionine sulfoxides into methionine in stereo-specific manner, being a potent molecular antioxidant.

The complete cDNA sequence of Rock bream putative MSR counterpart (RbMSRA) was consisted of 705 nucleotides codes for a protein of 235 amino acids with a predicted molecular mass of 26.2 kDa. Our computational characterization revealed that RbMSRA resembles the characteristic features of MSR family proteins including MSRA signature (GCFWD) and catalytic Cys residues in active sits, which were also found to conserve among different vertebrate counterparts, as identified by our multiple sequence alignment. RbMSRA showed greater sequence homology with its vertebrate similitudes, sharing the eminent percent identity (90.6 %) and similarity (93.2 %) with that of sablefish. Our phylogenetic reconstruction convinced that RbMSRA indeed possesses a common ancestral origin of vertebrates further validating its homology with fish MSRA counterparts. Moreover, its clustering pattern markedly affirmed its distance evolutionary relationship with MSRB variants, while forming a cluster with killifish MSRA counterpart. Tissue specific mRNA expression pattern detected by qPCR revealed a universal expression in tissues examined with prominent expression levels in blood. Role of RbMSRA under pathogen infection was prefigured by our immune challenge experiment in which RbMSRA expression was observed to modulate under the stress of bacterial pathogens mounted by *E. tarda*, and *S.iniae*. Altogether our findings suggest that RbMSRA may involve in a role of immune or post immune response probably related to its putative antioxidative role.

PP-163

Serine/threonine protein kinase ULK1 gene from rock bream (*Oplegnathus fasciatus*): molecular characterization and potential role in immune response against bacterial and viral pathogens

°J. D. H. E. Jayasinghe, G. I. Godahewa and Jehee Lee

Department of Marine Life Sciences, School of Marine Biomedical Sciences, Jeju National University, Jeju Self-Governing Province 690-756, Republic of Korea

Protein phosphorylation plays a vital role in the regulation of intracellular signal transduction. Phosphorylation of serine, threonine and tyrosine residues provides a fundamental mechanism for the control of cellular events such as signal transduction, apoptosis and responses upon environmental stimuli. This attempt is to encounter the immune function of serine/threonine protein kinase ULK1 (STPK) gene from rock bream (Rb) (*Oplegnathus fasciatus*). Rb cDNA library was used to detect the full-length cDNA of STPK. *In silico* analysis was done using molecular biological software and other web based servers. Challenge experiments were carried out with *Edwardsiella tarda*, *Streptococcus iniae* and rock bream iridovirus. The expression analysis of Rb-STPK mRNA was quantified using quantitative real time PCR (qPCR). The protein is 111kD in size and contains 1027 amino acids. Protein Kinase domain was identified between 9-271 amino acids. Two binding sites, an active site and a serine rich region were identified. Rb-STPK shows higher identity (90.3%) and similarity (92.9%) with *Oreochromis niloticus*. Rb-STPK highly expressed in blood followed by liver tissues. Rb-STPK in blood tissues positively responded to the challenge experiments. In *E. tarda* challenge, mRNA highly expressed at 6 h post injection (p.i.) while in both *S. iniae* and iridovirus challenges mRNA highly expressed at 12 h p.i. Results showed that Rb-STPK has a positive response to both bacterial and viral infections and STPK plays a potential role in innate immunity of rock bream.

PP-164

Molecular characterization of ubiquitin-conjugation enzyme (E2) in rock bream (*Oplegnathus fasciatus*) and its immune response

°J. D. H. E. Jayasinghe , G. I. Godahewa and Jehee Lee

Department of Marine Life Sciences, School of Marine Biomedical Sciences, Jeju National University, Jeju Self-Governing Province 690-756, Republic of Korea

Ubiquitination is a labeling mechanism which helps to detect the degradable proteins by the proteasomes. The ubiquitination cascade comprises of three enzymes named E1, E2 and E3. The key role of E2 (ubiquitin-conjugating enzyme) is regulating protein degradation, function, and localization controlling the biology of the eukaryotic cell. In this study, E2 gene was characterized to find the mechanism involved in immunity of rock bream (Rb) (*Oplegnathus fasciatus*) fish. *In silico* analysis was done using molecular biological software and other web base servers such as BLAST, DNAssist v2.2, MEGA 5.05, Color Align Conservation program and ClustalW2. Challenge experiment was carried out with live *Edwardsiella tarda* and iridovirus injection. The expression analysis of RbE2 was done using quantitative real time PCR (qPCR). Open reading frame of E2 is 17 kD in size which contains 152 amino acids. An ubiquitin conjugation site (Arg^{7} - Lys^{139}) and an active site (Cys^{88}) were identified. RbE2 shows higher identity (100%) and similarity (100%) with *Mus musculus*. RbE2 was ubiquitously expressed in blood tissue followed by liver tissue. RbE2 showed significantly higher ($P < 0.05$) mRNA expression levels at 12 h post injection (p.i.) in *E. tarda* challenge and 48 h p.i. in iridovirus challenge with liver tissues. Results showed that RbE2 has a positive response to both bacterial and viral infections suggesting E2 plays a potential function in innate immunity of rock bream.

PP-165

Molecular characterization and expression analysis of tumor necrosis factor promoter polymorphism TNF 2 from Seahorse (*Hippocampus abdominalis*)

°Jiyeon Ko, Wan Qiang, S.D.N.K. Bathige, and Jehee Lee

Department of Marine Life Science, Jeju National University, Jeju special Self-Goverming province 690-756, Republic of Korea

Tumor necrosis factor-α(TNF-α) plays a crucial role in mediating of inflammatory and immunological response as a pro-inflammatory cytokine, and also it has been speculated to contributed to the susceptibility of MHC-related autoimmune diseases. TNF 2, a polymorphism of the tumor necrosis-α gene promoter, is a variant of the TNF-α gene with a single base and is associated with increase of TNF-α production. Also TNF 2 has been associated with variety of MHC-linked diseases. The MHC is heavily resided in genes known to function in the immune system. In this study, TNF 2homolog was identified and characterized from seahorse (*Hippocampus abdominalis*). Seahorse cDNA transcriptome sequence database was established using Roche 454 Genome Sequencer FLX system(GS-FLX), a next generation DNA sequencing (NGS) technology. Using the BLAST algorithm, cDNA sequence of TNF 2 in seahorse was identified from GS-FLX database. *In silico* analysis was carried out using the molecular biological tools and web base servers such as PROSITE profile database, SMART protein database, EMBOSS pairwise sequence alignment and multiple sequence alignment. The phylogenetic tree was constructed using neighbor-joining method in the MEGA software version 5 based on the other counterparts. We have analyzed the mRNA expression level of TNF 2 in health and immune-challenged seahorse by quantitative real time PCR (qPCR). In order to determine the immune responses of TNF 2, *Edwardsiella tarada*, *Streptococcus iniae*, LPS, Scutica and the viral ds RNA mimic poly(I:C) were employed as immune stimulants in time course experiment. The complete cDNA sequence of seahorse TNF 2 was consisted of 729bp, with an open reading frame (ORF) that encoded 243 amino acid (aa). *In silico* analysis of TNF 2 showed a putative transmembrane region and characteristic TNF domain. The phylogenetic analysis revealed the evolutionary proximity of TNF 2 with other vertebrate species. Tissue profiling performed showed universal expression in all tissues including blood, brain, gill, heart, intestine, liver, kidney, muscle, ovary, pouch, skin, spleen, stomach and testis in health seahorse. The immune response of TNF 2 expression upon viral and bacterial challenges provided evidences that were related to viral and bacterial defense in seahorse. These results suggest that TNF 2 is likely to play a role in the immunological response against the invading pathogenics in seahorse.

PP-166

Molecular genomic identification and spatial expression analysis of *Rab-5C-like* gene from rock bream (*Oplegnathus fasciatus*)

°M. S. Mothishri, Navaneethaiyer Umasuthan, William Shanthakumar Thulasitha, Jehee Lee
Department of Marine Life Sciences, School of Marine Biomedical Sciences, Jeju National University, Jeju Special Self-Governing Province 690-756, Republic of Korea

Despite of its economic importance as an aquaculture species, the molecular mechanism of the immune system against pathogens in rock bream (*Oplegnathus fasciatus*) is not completely understood. Rab proteins play a vital role in immunity as one of the key regulators of membrane trafficking. In this investigation, a *Rab*gene named *RbRab-5C-like* was identified from *Oplegnathus fasciatus*. Based on the cDNA, we probed the BAC library and identified a gDNA sequence of *RbRab-5C-like* gene. Bioinformatics tools were used to characterize the sequences at cDNA, gDNA and protein levels. A GTPases named Rab-5C-likeinvolved in membrane trafficking has been identified from rock bream (*RbRab-5C-like*). The cDNA (2191 bp) of *RbRab-5C-like*possessed a coding sequence of 663 bp coding for a protein of 220 amino acids with molecular mass of 23.55 kDa and isoelectric point of 8.64. *RbRab-5C-like*possessed a 5′ UTR of 179 bp and 3′ UTR 1461 bp, it contained a Rab small GTPase like domain belongs to Ras-superfamily. Four conserved cysteine residues were identified when aligned RbRab-5C-like with other taxa Rab -5C-like GTPase. A phylogenetic tree was constructed with the Rab-5C-like homologues available in GenBank. RbRab-5C-like was placed closer to other fish homologues, whereas, the other taxa forma separate cluster along with their homologues. A multiple sequence alignment showed strong conservation of RbRab-5C-like with other homologues. The pairwise alignment revealed that it had highest similarity of 99.1% with *Oreochromis niloticus*. Different tissues of healthy fish were used to extract RNA, and to synthesize cDNA. Spatial expression analysis of Rab-5C-like by qPCR revealed relatively highest expression in liver tissue followed by heart. The results presented in this study would be useful for further understanding of the expression, regulation and mechanism of *Rab*s in bony fishes and their physiological functions.

PP-167

Functional characterization of *β defensin* from rock bream *Oplegnathus fasciatus*

°M. S. Mothishri, Navaneethaiyer Umasuthan, William Shanthakumar Thulasitha, Jehee Lee
Department of Marine Life Sciences, School of Marine Biomedical Sciences, Jeju National University, Jeju Special Self-Governing Province 690-756, Republic of Korea

B defensins are well recognized antimicrobial peptides present in every living being, which act as first line of host defense. These β defensins are cationically charged, and are able to identify and interact with the membranes of the microbes and destroy them. They perform as a passage between innate and adaptive immunity. Present study has focused on molecular characterization and mRNA expression of putative β defensin gene in rock bream (*Of-β defensin*).The cDNA and genomic DNA sequences of *β defensin* were isolated from rock bream cDNA and BAC genomic libraries, respectively. The nucleic acid and conceptual protein sequence was analyzed using various bioinformatics tools to generate multiple alignment sequence, phylogenetic inferences, domain structures and also the physic-chemical characteristic data. The full-length cDNA of *Of-β defensin* is 256 bp containing 192bp as its open reading frame (ORF) encoding 63 amino acids with a molecular mass of 7.23 kDa and theoretical isoelectric point of 8.88. The protein structure analysis data revealed that the Of-β defensin has two domains includingPA2c domain (5-59) and DEFSN domain (30-59) and three disulfide bridges between cysteines which are present in C1-C5 (30-58), C2-C4 (36-52) and C3-C6 (40-59). According to pairwise sequence analysis data, the Of-β defensin showed closest homology with mandarin fish (*Sinipera chuatsi*) β defensin with 96.8 % amino acid identity. Furthermore, the phylogenetic tree reflected the close evolutionary relationship of β defensin with its fish counterparts. *Of-β defensin* had 3 exons interrupted by 2 introns. In which ORF was distributed within all 3 exons. The qPCR experiment was conducted to determine tissue specific expressional distribution of β defensin in rock bream. The qPCR revealed relatively higher expression levels of β defensin in heart, blood and kidney tissues. The experiments for determination of immune responsive expression and the biological activity are currently on going. The preliminary results from these attempts emphasize that β defensins are highly conserved across the lineages, and *Of-β defensin* is the first *β defensin* homolog identified from rock bream

PP-168

CLONING AND CHARACTERIZATION OF FERRITIN-L SUBUNITS FROM SEAHORSE (*Hippocampus abdominalis*)

°Minyoung Oh, Eunyoung Jo, Wan Qiang and Jehee Lee

Department of Marine Life Science, Jeju National University, Jeju National University, Jeju special Self-Governing province 690-756, Republic of Korea

Ferritin is an important protein primarily regulates the level of iron which is an essential element for all living organisms. It is also involved in ferroxidase activity and immune response to invading stimulus. Generally, the ferritin protein shell consists of 24 protein subunits of two types including heavy (H) and light (L) types which were recognized in vertebrates as two distinct genes. The H subunit comprises the ferroxidase center, converting ferrous ion (Fe^{2+}) to ferric ion (Fe^{3+}), whereas the L subunit contains a site for nucleation with a mineral core to facilitate the iron nucleation. In the present study, we have identified and functionally characterized a ferritin-L subunit from seahorse (SHferritin-L).

Full-length cDNA sequence of SHferritin-L was identified from the cDNA transcriptome database established by 454 GS FLX sequencing technique. BLAST algorithm from NCBI was used to analyze the cDNA sequence. Pairwise sequence and multiple alignment were performed by mean of EMBOSS needle program. The phylogenetic analysis was done by the neighbor-joining method and the MEGA software version 5 was used to create the phylogenetic tree. The expression level of SHferritin-L mRNA was investigated in healthy and challenged seahorse. Recombinant ferritin-L was expressed as a fusion protein with the maltose binding protein (MBP).To determine the effect of purified recombinant SHferritin-L on the growth of bacterial pathogen, the bacteria was cultured in BHSI broth at 30 °C to mid-logarithmic phase. The culture was incubated at 30 °C, and cell densities were determined at different time points by measuring optical density (OD) at 600nm.

In this study, SHferritin-L from seahorse (*Hippocampus abdominalis*) was identified and characterized. The cDNA of seahorse SHferritin-L was composed of 818bp with a 522 bp open reading frame that encoded 174aa. Ferritin Phylogenetic analysis showed the higher evolutionary proximity of ferritin-L with fish counterparts. Tissue profiling performed showed ubiquitous expression in all tissues including blood, brain, gill, heart, intestine, liver, kidney, muscle, ovary, pouch, skin, spleen, stomach and testis. The highest expression of SHferritinL mRNA was observed in Stomach and followed by intestine. Moreover, transcriptional level of SHferritinL was up-regulated upon bacterial challenge. Recombinant SHferritin-L showed bacteriostatic activity that suppressed the growth of microorganism. These results suggesting that, SHferritin-L is likely to play a role in bacteriostatic activity. That it may involve in immune defense against microbial infection.

PP-169

Insights into the genomic evolution of a teleostean kinase in Toll-like receptor signaling: Flagellin induces rock bream (*Oplegnathus fasciatus*) *IRAK4* transcripts

°Navaneethaiyer Umasuthan, S.D.N.K. Bathige, William Shanthakumar Thulasitha, Jehee Lee
Department of Marine Life Sciences, Jeju National University, Jeju, South Korea

Interleukin-1 receptor-associated kinases (IRAKs) are intracellular kinases and play important roles in signal transduction mediated by Toll-like receptors (TLRs) and interleukin-1 receptors (IL-1Rs). This study investigates the molecular and expressional profiles of an IRAK4-like homolog from *Oplegnathus fasciatus* (*RbIRAK4*). The RbIRAK4 gene was 8.2 kb in length and had eleven exons and ten introns. A putative coding sequence of 1395 bp was translated to the RbIRAK protein of 464 amino acids. The deduced RbIRAK4 protein featured a dual-domain structure composed of a death domain (DD) and a kinase domain (PKc). Teleost IRAK4 appears to be distinct and divergent from that of tetrapods in terms of its exon-intron structure and evolutionary relatedness. The coding sequence of vertebrate IRAK4 seems to be generally distributed among eleven exons segmented by ten introns except in some salmonids. In contrast, comparison of representative invertebrate IRAK4s revealed that exon-intron composition largely varied not only in between the animal groups, but also within a specific class. This study identified that the relative intron density of invertebrate IRAK4s was lower than that of vertebrate IRAK4s.During the course of this work, two putative partial sequences corresponding to *O. fasciatus* IRAK1 and IRAK3 were also identified. In the phylogeny analysis, two putative IRAKs (RbIRAK1 and RbIRAK3) and RbIRAK4 clustered with the other fish orthologs belong to the corresponding subfamily. Analysis of the sequence upstream of translation initiation site revealed the presence of putative regulatory elements, including NFκB-binding sites, which are possibly involved in transcriptional control of RbIRAK4. Quantitative real-time PCR (qPCR) was employed to assess the transcriptional expression of RbIRAK4 in eleven different juvenile tissues and post-injection of different immunogens and pathogens. Ubiquitous basal mRNA expression was widely detected with highest level in liver followed by heart. Further, in spleen, gills, kidney, head kidney and PBCs, RbIRAK4 was moderately transcribed. Next, an infection model was produced by administering ultrapure flagellin (FLA; 2.4 µg/ fish).*In vivo* flagellin challenge significantly intensified its mRNA levels in intestine, liver and head kidney indicating its role in FLA-induced signaling. Meanwhile, we conducted a series of challenge experiments using immunogens and pathogens, as described earlier (Umasuthan et al., 2014). After these challenges, up-regulated expression was noticed in liver and head kidney of animals challenged with potent immunogens (LPS and poly I:C) and pathogens (*Edwardsiellatarda, Streptococcus iniae* and rock bream iridovirus (RBIV)). Collectively, these data implicate that RbIRAK4 might be engaged in antibacterial and antiviral immunity in rock bream. In addition, this study is the first to identify all the IRAK-family members (including partial information) in a teleost species.

PP-170

Exon-intron structure and promoter of a teleost *MyD88* that responds to flagellin-inoculation

°Navaneethaiyer Umasuthan, S.D.N.K. Bathige, William Shanthakumar Thulasitha, M. S. Mothishri , Jehee Lee

Department of Marine Life Sciences, Jeju National University, Jeju, South Korea

The MyD88 is an evolutionarily conserved host-expressed adaptor protein that is essential for right TLR/ IL1R immune-responsive signaling. When TLR perceives the signals, MyD88 recruits the IRAKs and assists the downstream signaling. Present study focused on the genomic characterization of a MyD88 identified from rock bream (*Oplegnathus fasciatus*) and evaluated its mRNA expression upon flagellin (FLA) administration. Based on a previously identified *MyD88* cDNA, a BAC library was screened by a two-step PCR method and the gDNA sequence of rock bream MyD88 (*RbMyD88*) was determined. The gene structure was inferred, and predicted promoter region was examined to identify the potential transcription factor binding sites (TFBS). A previously identified complete cDNA (1626 bp) of *RbMyD88* comprised an ORF of 867 bp encoding a protein of 288 amino acids (32.9 kDa). The gDNA (3761 bp) of *RbMyD88* revealed a quinquepartite genome organization composed of 5 exons (with the sizes of 310, 132, 178, 92 and 155 bp) separated by 4 introns. All the introns displayed splice signals consistent with the consensus GT/AG rule. A bipartite domain structure with two domains namely death domain (24-103) coded by first exon, and TIR domain (151-288) coded by last three exons were identified through *in silico* analysis. Moreover, homology modeling of these two domains revealed a similar quaternary folding nature between human and rock bream homologs. A comprehensive comparison of vertebrate *MyD88* genes showed that they possess a five-exonic structure in which last three exons were strongly conserved, suggesting that it has maintained a rigid structure during the vertebrate evolution. A cluster of TATA box-like sequences were found 0.25 kb upstream of cDNA starting position (Transcription initiation site). In addition, putative 5'-flanking region of *RbMyD88* was predicted to have TFBS implicated with TLR signaling, including copies of NFκB1, APRF/ STAT3, Sp1, IRF1 and 2 and Stat1/2. An infection model was generated by administering ultrapure FLA (Invivogen; 2.4 µg/ fish). The RNA extracted was used to synthesize cDNA, and SYBR Green qPCR was performed. In tissue distribution analysis, an ubiquitous mRNA expression was detected in liver and blood. Furthermore, a significantly up-regulated transcriptional expression of *RbMyD88* was detected in head kidney (12-24 h; >2-fold) and spleen (6 h; 1.5-fold) post-FLA challenge. These lines of evidence suggest that teleost *MyD88* may play an important role in TLR5 mediated recognition of flagellated bacteria.

PP-171

Genomic organization of a membrane form *TLR5* from *Oplegnathus fasciatus* rock bream (*RbTLR5M*): Basal expression and flagellin-mediated induced expression profiles in immune relevant tissues

°Navaneethaiyer Umasuthan, S.D.N.K. Bathige, William Shanthakumar Thulasitha, Jehee Lee
Department of Marine Life Sciences, Jeju National University, Jeju, South Korea

Toll-like receptors are key players in innate immunity, and recognize conserved pathogen-associated molecular patterns (PAMPs) to activate myriad of immune responses. TLR5 recognizes flagellin (FLA), a component of bacterial flagellum. Two distinct forms of TLR5 have been identified in fish: membrane anchored form (M) and soluble form (S). The current study identified a TLR5M from *Oplegnathus fasciatus* rock bream (*RbTLR5M*) and characterized it at molecular-, genomic- and expressional-levels. Using a combination of genomic and transcriptomic approaches, *RbTLR5M* was identified. It had a quinquepartite structure in which CDS was distributed in 4 exons. The CDS of 2667 bp encoded an 888 amino acid RbTLR5 protein (101 kDa) which contained a signal peptide (SP), a LRR domain composed of 22 LRRs and a TIR domain. RbTLR5M protein exhibited significantly higher identity (>60%) with corresponding teleost orthologs. An inter-species genomic comparison showed that the number of exons in which the *TLR5*'s CDS is distributed vary among different vertebrate classes. TLR5's CDS is distributed in 4 exons in teleosts, 2 or 1 exons in reptiles and a single exon in primates, respectively. The fourth exon was equal in all piscine species examined (89 bp), and other exon sizes slightly varied. All these species-specific exon-intron organizations implied that *TLR5M* gene has undergone extensive rearrangements. We also examined the sequence upstream of detected transcription initiation site. The putative promoter region of *RbTLR5M* possessed several binding sites for transcription regulatory factors that sense the immune signals. The *cis*-elements that present in *RbTLR5M* promoter are Sp1, AP-1 or Jun-Fos, Oct1, NF-κB, GATA-1, STAT1, Oct-1 CREB1 and C/EBPα/β binding sites. Based on qPCR analysis, tissue mRNA distribution of *RbTLR5M* demonstrated that it was ubiquitously transcribed in 11 tissues examined, with liver tissue showing the highest mRNA level. Next, an infection model was generated by administering ultrapure FLA (2.4 μg/ fish). Comparative Ct analysis showed that *RbTLR5M* mRNA levels slightly increased in response to FLA-challenge in head kidney (3.27-fold; 24 h) and spleen (~1.5-fold; 3 h). In addition, the MyD88, a central adaptor protein which interact with TLR5 to passage the signal downstream, also was induced at mRNA levels. Up-regulation of *RbMyD88* was detected in head kidney (12-24 h; >2-fold) and spleen (6 h; 1.5-fold) post- FLA challenge. These findings suggest that FLA stimulates the TLR5 and it could transcriptionally activate the downstream components. In summary, we have identified and characterized a teleostean *TLR5M* from rock bream. The deduced protein and genomic structure were characterized at *in silico* level. Tissue mRNA distribution was examined, and effect of FLA-administration on *RbTLR5* and *RbMyD88* was examined. Collectively, our results suggested a FLA-signaling role for rock bream *TLR5M*.

PP-172

Characterization of bactericidal permeability-increasing protein from big belly seahorse (*Hippocampus abdominalis*) and expression profiling after bacterial challenge

°Qiang Wan, Minyoung Oh, Jiyeon Ko, Eunyoung Jo and Jehee Lee
Marine molecular genetics Laboratory, Department of Marine Life Science, College of Ocean Science, Jeju National University, Jeju, Republic of Korea

Bactericidal permeability-increasing protein (BPI) is a member of the lipid transfer protein/lipopolysaccharide-binding protein family. It plays a crucial role in the innate defense system against Gram-negative bacterial infection. The cDNA sequences of BPI encoding genes have been identified in several teleost species; however the interaction of BPI with bacteria and cells as well as the signal transduction mechanism are still unclear. In this study, we reported the cloning and characterization of a full-length cDNA sequence of BPI gene from big belly seahorse, *Hippocampus abdominalis*. The seahorse BPI (HaBPI) cDNA is 1.9 kb in length, containing a 1,419 bp ORF which encodes a prepeptide of 473 amino acids (aa). The predicted protein sequence of HaBPI is approximately 51 kD and contains a 18 aa signal peptide. HaBPI possesses high homology with other teleostean BPI genes and is most similar to rock bream RbBPI/LBP-2 gene, with up to 73% identity in protein sequence. In phylogenetic analysis, HaBPI gene was clustered into teleost clade with a high bootstrap value. In healthy seahorse, BPI mRNA is transcribed universally in all the tissues examined, with the highest expression in spleen and liver. After experimental infection of *Edwardsiella tarda (*Gram-negative) and *Streptococcus iniae* (Gram-positive), HaBPI mRNA levels were significantly induced in kidney, liver and gill tissues. These results suggest that the seahorse HaBPI gene may play a role in innate immune response to bacterial infection.

PP-173

Molecular cloning of plasma kallikrein-like gene from big belly seahorse (*Hippocampus abdominalis*), a novel type of lectin involved in antibacterial defense

°Qiang Wan, Minyoung Oh, Jiyeon Ko, Eunyoung Jo and Jehee Lee
Marine molecular genetics Laboratory, Department of Marine Life Science, College of Ocean Science, Jeju National University, Jeju, Republic of Korea

Plasma kallikrein (KLK) belong to a subgroup of serine proteases, which was reported to be responsible for the regulation of blood pressure and activation of inflammation in mammals. However, recently several plasma kallikrein-like genes have been identified in fish and other lower vertebrates, which are suggested to play an alternative functional role as lectin. In this present study, we reported the molecular cloning and characterization of a full-length cDNA sequence of plasma kallikrein-like gene (HaKLK) from big belly seahorse, *Hippocampus abdominalis*. The seahorse HaKLK cDNA is ~1.2 kb in length, containing a 1,110bp ORF which encodes a peptide of 370 amino acids (aa). HaKLK protein contains a 19 aa signal peptide and the molecular mass is approximately 42 kD. HaKLK protein sequence showed highest similarity with plasma kallikrein-like gene of platyfish (*Xiphophorusmaculatus*) and skin mucus lectin gene of catfish (*Platycephalusindicus*), with identities of over 60%. Moreover, the motif scan analysis indicated that HaKLK gene is comprised of four PAN/APPLE-like domains, which is similar to its homologues. In tissue distribution analysis, HaKLK mRNA level was examined in 14 different tissues of healthy seahorse by qRT-PCR. HaKLK is constitutively expressed in all the tissues, with high levels in immune-related tissues. After immune challenge with LPS, *Edwardsiella tarda*, and *Streptococcus iniae*, HaKLK mRNA levels were significantly increased in blood, kidney, liver and gill. These results suggest that seahorse HaKLK gene may be involved in immune defense against bacterial infection. Further enzymic activities and other immune-related assays should be carried out to clarify the function of plasma KLK gene in fish linage.

PP-174

A member of serine protease inhibitor from rock bream, *Oplegnathus fasciatus* involved in immune responses

°S.D.N.K. Bathige, G.I. Godahewa, Navaneethaiyer Umasuthan, and Jehee Lee
Department of Marine Life Sciences, School of Marine Biomedical Sciences, Jeju National University, Jeju Self-Governing Province 690-756, Republic of Korea

Kunitz-type serine protease inhibitors (KTIs) are identified in various organisms including animals, plants and microbes. These proteins shared single or multiple Kunitz inhibitory domains link together or associated with other types of domains. Characteristic Kunitz type domain composed of around 60 amino acid residues with six conserved cysteine residues to stabilize by three disulfide bridges. KTIs are involved in various physiological processes, such as ion channel blocking, blood coagulation, fibrinolysis and inflammation. In this study, two Kunitz-type domains containing protein was identified from rock bream database and designated as RbKunitz.

The coding sequence of RbKunitz encoded for 507 amino acids with 56.2 kDa theoretical molecular mass and 5.7 isoelectric point (*p*I). There are several functional domains including MANEC superfamily domain, PKD superfamily domain, and LDLa domain were predicted in addition to the two characteristic Kunitz domain. Moreover, trypsin interaction sites were also identified in Kunitz domain. Homology analysis revealed that RbKunitz shared highest identity (77.6%) with *Takifugu rubripes*. Completely conserved 28 cysteine residues were recognized, when comparison of RbKunitz with other orthologs from different taxonomical groups. These structural evidences indicate the rigidity of RbKunitz folding structure to achieve the proper function. The phylogenetic tree was constructed using neighbor-joining method and exhibited that the KTIs from fish and non-fish has been evolved in separately. Rock bream was clustered with *Takifugu rubripes*.

The SYBR Green qPCR was performed to quantify the RbKunitz transcripts in different tissues from healthy fish and blood tissue from challenged fish. The mRNA transcripts of RbKunitz were detected in all tissues (muscle, spleen, head kidney, blood, heart, skin, liver, intestine, kidney and gills) analyzed and highest transcripts level was detected in gill tissues. Temporal transcription profile of RbKunitz in rock bream blood tissues was analyzed upon LPS (lipopolysaccharide), Poly I:C (Polyinosinic:polycytidylic acid) and *Edwardsiella tarda* challenge to understand the immune responses of this gene. Compare to the unchallenged control RbKunitz exhibited strong up-regulation at 24 h post injection (p.i.) after LPS and *E. tarda* injection. Comparatively robust expression of RbKunits was observed at 3 h p.i. upon Poly I:C challenge. Taken together all these data indicate that RbKunitz may involve into to immune responses upon pathogenic stress, in order to protect the rock bream.

PP-175

Molecular Cloning and Tissue Specific Expression of serine/threonine protein phosphatase PP1-β catalytic subunit (*PPP1CB*) in Rock bream, *Oplegnathus fasciatus*

°Seongdo Lee[1], Yucheol Kim[1], Thanthrige Thiunuwan Priyathilaka[1], U. I. L. Perera [1], Hyowon Kim[1], Hyungbok Jeong[2], Seongil Kang[2], Changnam Jin[2], Jehee Lee[1] and Bongsoo Lim[2]

[1]Department of Marine Life Sciences, School of Marine Biomedical Sciences, Jeju National University, Jeju Self-Governing province,690-756, Republic of Korea

[2]Fish Vaccine Research Center, Jeju Self-Governing province, 690-814, Republic of Korea

Apoptosis is known as the programmed cell death that plays a very important role in immune system as well as for removal of damaged cells or potential cancer cells. In eukaryotic cells, the reversible phosphorylation is catalyzed by protein kinase and protein phosphatase. The serine/threonine protein phosphatase (PP1) is involved in the regulation of numerous cellular processes including apoptosis. Bcl-2 family is a major apoptotic pathway which controlled cell survival. The previous experiment demonstrated that the relationship between Bcl-2 and PP1/PP2A phosphatase. Herein we characterized Serine/threonine protein phosphatase PP1-β catalytic subunit (*PPP1CB*) counterpart from Rock bream (*Oplegnathus fasciatus)* designated as *rbPPP1CB* at transcriptional level. In this study, cDNA coding for serine/threonine protein phosphatase PP1-βcatalytic subunit (rb*PPP1CB*) was obtained using the roche 454 Genome Sequencer FLX System (GS-FLX^{TM}). *In silico* analysis was conducted to determine the conserved domains and to compare the evolutionary relationship between other species. Real-Time quantitative PCR was performed to determine the tissue distribution of *rbPPP1CB*. The full length cDNA sequence (1805bp) of serine/threonine protein phosphatase PP1-β catalytic subunit (*rbPPP1CB*) contained a 991bp open reading frame (ORF) encoding 327 amino acids, 110bp of 5'-untranslated region (UTR), 110bp of 3'-UTR. The protein structure analysis data revealed that the rbPPP1CB bears a characteristic Serine/Threonine specific protein phosphatases signature. According to phylogenetic tree, rbPPP1CB clustered with its fish counterparts. Moreover pairwise sequence alignment of rbPPP1CB exhibited 99.4% identity with Channel catfish*, Ictalurus punctatus* ortholog. The mRNA transcripts of *rbPPP1CB*ubiquitouslyexpressed in all tissues we tested and highest expression was observed in heart follow by blood.

PP-176

Molecular characterization of arginine kinase (AK) counterpart from disc abalone (*Haliotis discus discus)*

°Thanthrige Thiunuwan Priyathilaka[1*], Yucheol Kim[1], Hyung-Bok Jeong[2], Seong-il Kang[2], Changnam Jin[2], Seongdo Lee[1], Hyowon Kim[1], Jehee Lee[1,2] and Bong-Soo Lim[2]

[1]Department of Marine Life Science, School of Marine Biomedical Sciences, Jeju National University, Jeju Special Self Governing Province, 690-756, Republic of Korea

[2]Fish Vaccine Research Center, Jeju Special Self-Governing Province 690-814, Republic of Korea

Arginine kinase (AK) is a well-known phosphahen kinase that found in invertebrate organisms, which plays a significant role in energy metabolism. The main function of AK is maintenance of high ATP values by catalyzing the reversible transfer of the phosphate group from MgATP to arginine. However several immunological responses of AKs have been reported. Herein, this study was carried out to identify and characterize the arginine kinase counterpart from disc abalone (*Haliotis discus discus*) designated as *AbAk*, at transcriptional level. In this study, the full length cDNA sequence of *AbAk* was identified using previously constructed cDNA sequence database. Identified *AbAk* sequence was characterized using several bioinformatics tools. The quantitative real time PCR (qPCR) experiment was conducted to determine the tissue specific expressional distribution of *AbAk*. The full length cDNA sequence of *AbAk* was 1502bp in length with an open reading frame (ORF) of 1071 bp. The deduced AbAk protein sequence was composed of 357 amino acid residues with estimated molecular mass of 39.9 kDa and theoretical iso electric point of 7.13. The anticipated protein structure resembled a typical phosphagen kinase domain architecture including phosphagen kinase N-terminal domain profile (residues 3-15), phosphagen kinase C-terminal domain profile (residues 113-350), aldehyde dehydrogenase glutamic acid active site (residues 247-254) and phosphagen kinase active site signature (residues 266-272). The secondary structure and protein folding prediction exhibited that the AbAk bears a highly structured and folded phosphagen kinase N-terminal domain compared to the phosphagen kinase C-terminal domain. Moreover, computer simulated 3D homology structural model of AbAk revealed that, the AbAk protein is composed of core five-stranded parallel β-sheet flanked by twelve α-helices on both sides. Our phylogenetic analysis of AbAk revealed close evolutionary relationships with its mollusks counterparts. Pairwise sequence alignment analysis of the AbAk protein with other known arginine kinase homologues from *Haliotis madaka, Biomphalaria glabrata, Nesiohelix samarangae and Portunus trituberculatus* showed that AbAk shears 80.8%, 76%, 73.5% and 52.5% percent identity values, respectively. According to the qPCR data, *AbAk* mRNA transcripts were eminently expressed in digestive tract followed by brain and gills.

PP-177

Evidences for the involvement of a member of protein kinase in rock bream (*Oplegnathus fasciatus*) immunity: Bioinformatics and expression analysis

°U. I. L. Perera[1], S. D. N. K. Bathige[1], Yucheol Kim[1], Thanthrige Thiunuwan Priyathilaka[1], Hyowon Kim[1], Hyungbok Jeong[2], Seongil Kang[2], Changnam Jin[2], Jehee Lee[1] and Bongsoo Lim[2]

[1]Department of Marine Life Sciences, School of Marine Biomedical Sciences, Jeju National University, Jeju Self-Governing province,690-756, Republic of Korea

[2] Fish Vaccine Research Center, Jeju Self-Governing province, 690-814, Republic of Korea

Protein kinase C (PKC) is involved in specifically the phosphorylation of hydroxyl group of serine and threonine residues in proteins. This process is activated by calcium and second messenger diacylglycerol. It has been reported that the PKC had involved in various cellular functions such as B cell activation, apoptosis induction, endothelial cell proliferation and intestinal sugar absorption. In this study, we have identified and characterized a PKC beta gene from rock bream *Oplegnathus fasciatus* (RbPKCβ). The 5003 bp of the cDNA included an open reading frame of 2001 bp encoding a polypeptide of 667 amino acids (aa) with a molecular mass of 75.9 kDa and estimated p*I* of 6.00. Sequence analysis revealed that the RbPKCβ composed of several characteristic features of PKC family, such as protein kinase domain (338-596 aa), two DAG-type domains (ZF-DAG-PE-2), C-terminal domain (AGC-KINASE-CTER) and C2 domain. A possible ATP binding site (Lys^{367}) was also identified. The full length RbPKCβ aa sequence shared a higher sequence identity (96.6%) and similarity (99.0%) with *Pundamilia nyererei*. RbPKCβ mRNA expression level was quantified by SYBR Green quantitative real time PCR (qPCR) and tissue specific expressional studies revealed that RbPKCβ is mainly expressed in heart followed by gill tissues. In addition, RbPKCβ mRNA expression level in gills was analyzed after two bacterial infections (*Streptococcus iniae* and *Edwardsiella tarda*). Significantly highest mRNA expression was observed at 6 h post injection of both Gram-positive and negative bacteria. These results hypothesized that RbPKCβ might be involved in immune responses upon bacterial stress in order to protect rock bream.

PP-178

A CXC chemokine from *Oplegnathus fasciatus*: Molecular characterization and mRNA expressional profile under pathological conditions

°William Shanthakumar Thulasitha, Navaneethaiyer Umasuthan, Jehee Lee
Department of Marine Life Sciences, School of Marine Biomedical Sciences, Jeju National University, Jeju Self-Governing Province 690-756, Republic of Korea

CXC chemokines belongs to the family of cytokines are characterized by the presence of conserved cysteine residues in N-terminal. They are involved in various physiological processes including immunity, development and hematopoiesis as chemo attractants. The present study was designed to identify the teleostean CXC chemokine and its transcriptional pattern upon normal and pathological conditions from rock bream *Oplegnathus fasciatus*. A full length of *O. fasciatus* CXC chemokine CXCL12 (*OfCXCL12*) was identified from the cDNA library and *in silico* analysis was performed to identify the characteristic features of cDNA and protein. The mRNA expression level of different tissues from healthy fish, and headkidney and spleen from immune challenged animals with LPS, Poly I:C, Irido virus, *Edwardsiella tarda* and *Streptococcus iniae* were detected by qPCR. The coding sequence of *OfCXCL12* was composed of 297 bp encoding a protein of 98 amino acids with a molecular mass of 11.257 kDa. The deduced peptide had a signal peptide of 23 AA and the mature peptide of 75 AA. Characteristic conserved C-X-C domain of OfCXCL12 was present from 32 to 34 (^{32}C- ^{33}Y-^{34}C) and the ^{48}E-^{49}L-^{50}R motif was present within the family specific SCY domain which was highly conserved among all vertebrate CXCL12s. It shared highest identity and similarity with *Seriola lalandi* homolog. In healthy fish, qPCR assay revealed highest level of mRNA expression in headkidney tissue followed by spleen. Upon challenged with all the immune stimulants, except with LPS, enhanced expression of *OfCXCL12* ($p<0.05$) was observed after 6 h of post-injection in both head kidney and spleen. Results from the present study suggest the significant role of *OfCXCL12* upon viral and bacterial infection in the immuno-physiology of rock bream.

PP-179

Molecular characterization and expression of fish OKL38 family protein: OSGIN2 from rock bream *Oplegnathus fasciatus*

°William Shanthakumar Thulasitha, N. Umasuthan, M.S. Mothishri and Jehee Lee
Department of Marine Life Sciences, School of Marine Biomedical Sciences, Jeju National University, Jeju Self-Governing Province 690-756, Republic of Korea

The Oxidative stress induced growth inhibitor-2 (OSGIN2) is a member of OKL38 family protein which involves in the differentiation and proliferation of cells by regulating apoptosis and cell death. It retards the tumor progression by inhibiting the cell growth. The present study was carried out to identify the molecular characteristics and mRNA expression of *OSGIN2* from *Oplegnathus fasciatus.* The cDNA and genomic DNA of the rock bream OSGIN2 (*RbOSGIN2*) were identified from cDNA and BAC library respectively. The *in silico* analysis was conducted using bioinformatic tools. The full length cDNA of rock bream OSGIN2 (*RbOSGIN2*) comprised of 3597 bp was identified from the cDNA library which included a coding sequence of 1629 bp encoding 542 amino acids. The predicted molecular mass of the putative peptide was 5.13 kDa with an isoelectric point of 5.13. The genomic structure of *RbOSGIN2,* comprised of seven exons and six introns, was identified by screening and sequencing of specific BAC clone. Phylogenetic analysis by Neighbor–Joining method and pairwise alignment revealed that RbOSGIN2 shared a closer relationship with *Dicentrarchus labrax* OSGIN2 (93.4 % identity and 96.5% similarity) and clustered together with fish clade. It shared 48.3 % of identity and 59.9 % similarity with *Homo sapiens* OSGIN2. The mRNA expressional profile under normal physiological conditions by SYBR Green quantitative real time PCR (qPCR) explained that the *RbOSGIN2* was ubiquitously expressed in all examined tissues with the significant highest expression *($p<0.05$)* in blood tissue followed by gill, liver and headkidney.

PP-180

MOLECULAR CHARACTERIZATION AND TRANSCRIPTIONAL ANALYSIS UPON VIRAL AND BACTERIAL PATHOGENS OF NOVEL PROFILIN ORTHOLOG FROM DISC ABALONE (*Haliotis discus discus*)

°Yucheol Kim[1], Hyung-bok Jeong[2], Seong-il Kang[2], Changnam Jin[2], H.M.L.P.B. Herath[1], Jehee Lee[1] and Bong-soo Lim[2]

[1]Department of Marine Life Sciences, School of Marine Biomedical Sciences, Jeju National University, Jeju Self-Governing province,690-756, Republic of Korea

[2] Fish Vaccine Research Center, Jeju Self-Governing province, 690-814, Republic of Korea

Profilines are small, well characterized actin binding proteins, which are involved in essential biological processes in all kinds of organisms. The prominent function of this ubiquitous protein is regulation of actin polymerization, which is known to play a key role during cell motility. Moreover there are several significantly important biological functions of profilines have been reported, such as membrane trafficking, neurological diseases, tumor formation, small-GTPase signaling and number of nuclear activities. However previous studies have reported some indirect immune responses of profilines in vertebrates against several kinds of immune stimuli. Herein we attempt to identify and characterize profilin counterpart from disc abalone (*Haliotis discus discus*) at molecular and transcriptional level. The full length cDNA sequence (1516 bp) of abalone profilin (AbPro) contained a 445 bp 5□ untranslated region (UTR), an open reading frame (ORF) of 411 bp and a 3□ UTR of 660 bp. The deduced AbPro protein composed of 137 amino acid residues with predicted molecular mass of 15.08 kDa and theoretical isoelectric point of 5.91. Domain architecture analysis data exhibited that, the deduced protein bears a characteristic PROF domain. Pairwise sequence alignment of AbPro protein with homologous proteins showed that, the deduced AbPro has highest amino acid identity (51.4%) and similarity (69.7%) to *Haliotis diversicolor*. According to the constructed phylogenetic tree diagram, the deduced AbPro showed closest evolutionary relationship with its ortholog *of Haliotis diversicolor*. Quantitative real time PCR (qPCR) analysis revealed that, AbPro transcripts were ubiquitously expressed in hemocytes, ovaries, gills, hepatopancreas, digestive tract, mantle, muscles and testis in healthy animals with a highest expression fold in hemocytes, while weak expression levels were detected in testis. Moreover, upon the induction with live bacteria (*Vibrio parahaemolyticus*) and virus (viral hemorrhagic septicemia virus), the AbPro mRNA transcripts were up-regulated at several post induction points in gills and hemocytes. Collectively these results suggest that AbPro is an indeed homologue of profilin family and putative role of its innate immune responses against live pathogens and virus.

PP-181

Pharmacokinetics and Residues of Amoxicillin after Intramuscular Injection to Cultured Olive Flounder, *Paralichthys olivaceus*

°Ji-Soo Kim, Ji-Hoon Lee, Soo-Jin Lee and Kwan-Ha Park

Department of Aquatic Life Medicine, College of Ocean Science and Technology, Kunsan National University

The pharmacokinetic propertiesand residue levels of amoxicillin (AMOX) were studied after intramuscular injection to cultured olive flounder, *Paralichthysolivaceus* (100±50g) at 22±2°C.The concentrations of AMOX were measured in olive flounder using by plasma and muscles.Concentrations of AMOX were determined after dosage of 20 and 40 mg/kg body weight in plasma and dosage of 40 and 400 mg/kg body weight in muscles.Plasma samples were taken at 0.25, 0.5, 1, 3, 6, 12, 24, 48, 72, 96 and 168 h post-dose and muscle samples were taken at 48, 120, 168, 336 and 504 h post-dose. AMOX concentrations were analyzed by high performance liquid chromatography UV-visible detector (HPLC-UVD) in plasma and liquid chromatography tandem mass spectrometer (LC-MS/MS) in muscles. In dosage of 20 and 40 mg/kg, the peak plasma concentrations of AMOX were respectively 35.3 and 97.5 μg/ml at 1 h post-dose but were not detected at 168 h post-dose in all experiments. In dosage of 40 and 400 mg/kg, the peak muscle concentrations of AMOX attained respectively 26.7 and 1485.1 μg/kg at 48 h post-dose but were not detected at 336 and 504 h post-dose, respectively.

PP-182

Pharmacokinetics and Residues of Ampicillin after Intramuscular Injection to Cultured Olive Flounder, *Paralichthys olivaceus*

°Ji-Hoon Lee, Ji-Soo Kim, Soo-Jin Lee and Kwan-Ha Park

Department of Aquatic Life Medicine, College of Ocean Science and Technology, Kunsan National University

The pharmacokinetic propertiesand residue levels of ampicillin (AMP) were studied after intramuscular injection to cultured olive flounder, *Paralichthysolivaceus* (100±50g) at 22±2°C.The concentrations of AMP were measured in olive flounder using by plasma and muscles.Concentrations of AMP were determined after dosage of 5, 10, 20 and 40 mg/kg body weight in plasma and dosage of 20 and 200 mg/kg body weight in muscles.Plasma samples were taken at 0.25, 0.5, 1, 3, 6, 12, 24, 48, 72, 96 and 168 h post-dose and muscle samples were taken at 48, 120, 168, 336 and 504 h post-dose. AMP concentrations were analyzed by high performance liquid chromatography UV-visible detector (HPLC-UVD) in plasma and liquid chromatography tandem mass spectrometer (LC-MS/MS) in muscles.

In dosage of 5, 10, 20 and 40 mg/kg, the peak plasma concentrations of AMP were respectively 9.1, 15.1, 32.9 and 63.4μg/ml at 0.25~1h post-dose but were not detected at 168 h post-dose in all experiments. In dosage of 20 and 200 mg/kg, the peak muscle concentrations of AMP attained respectively 35.5 and 422.7μg/kg at 48 h post-dose but were not detected at 336 and 504 h post-dose, respectively.

PP-183

Studies on efficacy of ampicillin against *Streptococcus spp.* isolated from olive flounder, *Paralichthys olivaceus*

°Soo-JinLee, Ji-Soo Kim, Ji-Hoon Lee and Kwan-Ha Park
Department of Aquatic Life Medicine, Kunsan National University

Ampicillin (AMP) is used in aquacultureto treat streptococcal infectionswith an oral administration and dipping administration, yet it has flaws that it comes with loss of appetite and is washed away depending on drug absorptionand bio-availability. This research seeks solutions for these problems and is presenting antibacterial effectiveness and therapeutic effects of AMP for flounders with streptococcal infections by adopting an injection method.

To find proper concentration of AMP, we measured MIC(minimum inhibitory concentration) against the*Streptococcus*strains that are fish pathogenic.

The MIC of AMPagainst*S. iniae* showed moderate sensitivity on 7bacterial strains out of 14 bacterial strains with 0.6-5.0 μg/ml and 3 resistant bacterial strains. The MIC against*S. parauberis* showed 7 cases of 0.6-1.0 μg/ml and the rest2 cases werehighlyresistant bacteria out of 12 bacterial strains. In 2 weeks of in vivo challenge tests,cumulative mortality was90%, 60%, 40%, 15%in flounders which were injected with AMPat 5, 10, 20 and 40 mg/kg, respectively. No flounders with *S. parauberis* infection were killed. There were some symptoms which could be ascribed tostreptococcicosis with 20mg/kg AMP injection. However these symptoms were not shown in flounders with 40 mg/kgAMPinjection.

PP-184

Studies on efficacy of amoxicillin against *Streptococcus spp.* isolated from olive flounder, *Paralichthys olivaceus*

°Soo-Jin Lee, Ji-SooKim, Ji-Hoon Lee and Kwan-Ha Park

Department of Aquatic Life Medicine, Kunsan National University

Amoxicillin (AMOX) is used in aquacultureto treat streptococcal infectionswith an oral administration and dipping administration, yet it has flaws that it comes with loss of appetite and is washed away depending on drug absorptionand bio-availability. This research seeks solutions for these problems and is presenting antibacterial effectiveness and therapeutic effects of AMOX for flounders with streptococcal infections by adopting an injection method.

To find proper concentration of AMOX, we measured MIC(minimum inhibitory concentration) against the*Streptococcus*strains that are fish pathogenic.

The MIC of AMOX against*S. iniae*showed moderate sensitivity on 6 bacterial strains out of 14 bacterial strains with 0.6-5.0 μg/ml and 3 resistant bacterial strains. The MIC against*S. parauberis*showed 3 cases of 0.6-1.0 μg/ml and the rest2 cases werehighlyresistant bacteria out of 12 bacterial strains. In 2 weeks of in vivo challenge tests,cumulative mortality was 85%, 35%, 5% in flounders which were injected with AMOXat 0, 20 and 40 mg/kg, respectively. No flounders with *S. parauberis* infection were killed. There were some symptoms which could be ascribed tostreptococcicosis with 20mg/kg AMOX injection. However these symptoms were not shown in flounders with 40 mg/kgAMOX injection.

PP-185

Hierarchical Dendrogram of Genetic Distances Obtained from Mollusk Species

°Dae-Hyun Kim, Sang-Hoon Choi and Jong-Man Yoon

Department of Aquatic Life Medicine, College of Ocean Science and Technology, Kunsan National University, Gunsan 573-701, Korea

We performed clustering analyses to reveal the genetic distances among three mollusk species from Tongyeong and Jeju Island of the Korean peninsula.Muscle tissues were collected separately from three species of *Nortameaconcinua*(NC)and *Haliotis discushannai*(HDH)and *Sulculusdiversicolorsupertexta*(SDS)of the Korean peninsula, respectively. PCR analysis was performed on DNA samples extracted from a total of 21 individuals using seven decamer oligonucleotides primers. DNA extraction should be carried out according to the separation and extraction methods (Yoon & Kim, 2004).A hierarchical clustering tree was constructed using similarity matrices to generate a dendrogram, which was facilitated by the Systat version 10 (SPSS Inc., Chicago, IL, USA).In this study, as regards average bandsharing value (BS) results, individuals from HDH species (0.772) exhibited higher bandsharing values than did individuals from NC species (0.655).The decamer primer BION-50 generated 49 unique loci to each species in the SDS species. The dendrogram obtained by the seven decamer primers indicates three genetic clusters: cluster 1 (CONCINNA 01 ~ CONCINNA 07), cluster 2 (HANNAI 08 ~ HANNAI 14), cluster 3 (SUPERTEXTA 15 ~ SUPERTEXTA 21). Among the seven clams, the shortest genetic distance that displayed significant molecular differences was between individuals 08 and 09 from the SDS species (genetic distance = 0.041), while the longest genetic distance among the twenty-one individuals that displayed significant molecular differences was between individuals NC no. 05 and HDH no. 21 (genetic distance = 0.627). Comparatively, individuals of HDH species were fairly closely related to that of SDS species, as shown in the hierarchical dendrogram of genetic distances.

PP-186

Characteristics of koi herpesvirus (KHV) in healthy seeds of cyprinids

°Mi-Young Cho, Seong Don Hwang, Kwang Il Kim, Boyoung Jee and Myoung-Ae Park
Aquatic life Disease Control Division, National Fisheries Research and Development Institute, Busan, Korea

To prevent a transmission of infectious agents by releasing hatchery raised seeds into nature, Korean government has been conducting the inspection of all the hatchery reared seeds on notifiable infectious diseases in stock enhancement programs since the Aquatic animal disease control act came into force in 2008. KHV is a virus that belongs to Alloherpesviridae and also called cyprinid herpesvirus 3 (CyHV-3) (Haramoto et al., 2007). KHV is genetically similar to carp pox virus (CyHV-1) and goldfish haematopoietic necrosis virus (CyHV-2) that belong to cyprinid herpesviruses, but is distinguished from channel catfish virus (IcHV-1) and Ranid (frog) herpesvirus (RaHV-1) (Waltzek et al., 2005). This report describes the detection of KHV from healthy seeds of cyprinids to be released for stock enhancement programs from 2009 to 2010 in Korea and the identification of genetic relatedness of KHV isolates using amplified ORF40 region. Fish samples were collected when the status of local governments that released cultured common carp and crucian carp seedling for the purpose of resources enhancement was surveyed from 2009 to 2010. Spleen and kidney were chosen since gill, kidney, and spleen are known to be the organs in which KHV is most abundant during the course of overt infection (Gilad *et al.,* 2004). Brain was chosen since OIE (2013) recommends including intestine and encephalon when testing sub-clinical or apparently healthy fish by PCR-based methods. Diagnosis of KHV was based on detection of KHV DNA in tissue by PCR assays using primer sets of TK and Sph for Bercovier TK and Gray SphI-5 (Yuasa modification), respectively, recommended by OIE (2013). The nucleotide sequences obtained from individual PCR reactions were analyzed using BLAST program to compare with KHV sequences in the NCBI data bank. Subsequent PCR for ORF40 was carried out to identify the genotype of the detected KHV in 2010. KHV was detected from 24 cases among 232 inspections with yearly detection rates of 5.2% in 2009 and 15.5% in 2010 by PCR using primer sets for TK or SphI-5 as recommended by OIE Aquatic manual. In the comparison of the primer sets, SphI-5 primer set was slightly more sensitive as shown a higher detection rate. To elucidate the genotype of the KHV detected in this study, ORF40-specific PCR amplification was conducted and the product of 6 Korean isolates revealed 100% nucleotide sequence identity with the strains isolated from Japan (Genbank AP008984) but not with USA (D G657948) and Israel (DG177346). This is a report on KHV detection in externally healthy crucian carp, indicating a possibility that asymptomatic but weekly infected or carrier state seeds could be released with a potential threat to wild population.

Haramoto E, Kitajima M, Katayama H, Ohgaki S (2007) Detection of koi herpesvirus DNA in river water in Japan. J. Fish Dis., **30**: 59–61.

Gilad O, Yun S, Zagmutt-Vergara FJ, Leutenegger CM, Bercovier H, Hedrick RP (2004)Concentrations of a Koi herpesvirus (KHV) in tissues of experimentally infected *Cyprinus carpio koi* as assessed by real-time TaqMan PCR. Dis. Aquat. Org., **60**, 179-187.

Waltzek TB, Kelley GO, Stone DM, Way K, Hanson L, Fukuda H, Hirono I, Aoki T (2005) Davison, A. J. and Hedrick, R.P.: Koi herpesvirus (KHV) represents a third cyprinid herpesvirus (CyHV-3) in the family Herpesviridae. J. Gen. Virol., 86:1659-1667

PP-187

Evaluation of bio preservation and gamma irradiation for preservation of sea food *Penaeus monodon*

°Paari Alagesan[1,2] and Venkatesan Arul[3]

[1]East coast life science institute, Gangneung-Wonju National University, Gangneung,Korea
[2]Department of Marine Bioscience, Gangneung-Wonju National University, Gangneung, Korea
[3]Department of Biotechnology, School of Life science, Pondicherry University, Pondicherry, India

The influence of *Streptococcus phocae* PI80 and *Enterococcus faecium* MC-13 on the shelf life of fresh black tiger shrimp *Penaeusmonodon* was investigated after appraising the safety of the probiotic cultures *S. phocae* and *E. faecium* in *wistar* rats. The results of safety assessment indicated that oral administration of probiotic cultures does not demonstrate any toxicological effects. Treatment had no adverse effects on animal's general health status, haematology, blood biochemistry, histology parameters, or on the incidence of bacterial translocation. After appraising the safety of protective cultures, the efficacy of protective culturein inhibition of microbial load in refrigerated sea food was assessed. The effect of *S. phocae* and *E. faecium* was very evident with the reduction of *Listeriamonocytogenes*, *Vibrio parahemolyticus*&*E*nterobacter*coliforms*. By the end of the experiment, the lowest total volatile base, microbial load was observed in probiotic culture inoculated food samples and the highest in controls. Our results validated the feasibility of using *E. faecium* and *S. phocae*as a possible candidate for a starter culture to increase the quality, and nutritive value in sea foods. The efficiency of gamma radiation in combination with antioxidant wrapping for extending the quality and shelf-life of fishery products was also evaluated. Quality assessment was studied by monitoring the chemical, microbiological and electro paramagnetic resonance spectral analysis. A dose-dependent reduction of TVB and TMA was contemplated with irradiated samples. Lowest TVB and TMA were seen in 10 kGy irradiated samples. Infusion of fish samples with antioxidants diminished the intensity of EPR radical peak in irradiated samples. The quenching capacities of *Vitus vinifera*(grape), *Citrus limon*(lemon), *Punicagranatum*(pomegranate), *Citrus sinensis* (orange) were studied together with their antioxidant activity in irradiated samples. Radical scavenging activity measured by electron paramagnetic resonance against a stable radical 1,1,-diphenyl-2-picrylhydrazil, revealed radical peaks of lower intensity in antioxidant infused samples.

PP-188

Detection of *Azumiobodo hoyamushi,* the causative agent of soft tunic syndrome of the sea squirt *Halocynthia roretzi* using real-time qPCR

°Kyung-Il Park[a], Ki-Woong Nam[a], Yun-Kyung Shin[b]

[a]Department of Aquatic Life Medicine, College of Ocean Science and Technology, Kunsan National University, 558 Daehakno, Gunsan 573-701, Republic of Korea

[b]National Fisheries Research Institute, Busan 619-705, Republic of Korea

Recently, the flagellated protozoan,*Azumiobodo hoyamushi*, has been identified as the causative agent of Soft tunic syndrome (STS) of the edible sea squirt *Halocynthia roretzi*. The present study intended to investigate infection of the pathogen in the benthic or fouling animals found in a sea squirt long-line hanging culture farm using PCR and real-time qPCR.Several benthicorganisms including *Ciona intestinalis*, *Styela clava*,*Asterias amurensis,*wild*Halocynthia roretzi*, unidentified sea algae, and sea water were collected by SCUBA diving from thebottom of a sea squirt farm or fouled on the suspended sea squirt line in Tongyeong, on the southern coast of Korea. PCR assay designed to amplify the specific 18S rRNA sequence of *A. hoyamushi*showed the positive reaction in the samples ofsea water and*C. intestinalis* and*S. clava*collected fromthe hanging culture line, while samples collected from bottom of the farm showed negative reaction.Real-time qPCR revealed that the number of *A. hoyamushi*per cm^2 of the tunics of specimens varied from 22.0 to 354.5 for *C. intestinalis*(n=5) and from 22.3 to 37.7 for*S. clava*(n=5), respectively. Our study may be useful to understand the life cycle and the transmission mechanism of *A. hoyamushi* in water column.

PP-189

Characterization and resuscitation of viable but non-culturable *Edwardsiella tarda*

°Nam-I Gang, Jin-Young Park, Se-Yun Jin and Eunheui Kim

Department of Aqualife medicine, Chonnam National University

It has recently been demonstrated that the inability to culture bacteria from non-optimal environments is due not to cell death, but to the viable but non-culturable(VBNC) state. Bacteria in the VBNC state fail to produce colonies on routine bacteriological media on which they should grow. The formation of the VBNC state in bacteria has been proposed as a strategy for survival in adverse conditions. The problem, at least in part, is that these organisms can persist for long periods in the environment. Moreover, non-culturable populations of pathogenic bacteria in the environment may still be capable of causing disease if ingested by a susceptible animal host, as it is suspected that the cells can revert to a culturable state. The aim of the present study was to investigate the resuscitation of VBNC cells of the fish pathogen *E. tarda* experimentally induced under starvation conditions at 10℃.

The microcosm was prepared by filtering aged seawater through a ø0.45 ㎛ filter, and autoclaving for sterilization. Washed cells were re-suspended in the microcosm at a final density of 10^8CFU/ml. The inoculated microcosm was maintained at 10℃. When less than one platable colony was obtained from10ml of the microcosm, *E. tarda* was determined to be in the non-culturable state. For resuscitation of the VBNC cells with an up-shift of temperature, 10ml of the VBNC cells was removed from the microcosm and incubated at 25℃. Resuscitation was subsequently measured by plating the cells on tryptic soy agar(TSA) each day. Resuscitation was designated as positive when the VBNC cells *of E. tarda* formed colonies on the culture media. To determine the effect of diverse conditions and the physiological influence on resuscitation of the VBNC cells, yeast extract(0.025%, w/v), fish-muscle extract(0.025%, v/v) or fish-serum(0.025%, v/v) were added to samples of the VBNC cells, and incubated at 25℃. Resuscitation was determined as described above, and measured each day. Biochemical characters of the resuscitated cells were compared with the original *E. tarda* using the api 20E and api 50CHE kits.

E. tarda entered into the VBNC state within about 42~84 days of incubation in the sterilized seawater microcosm at 10℃. When 10ml VBNC samples containing yeast extract, muscle extract or serum were incubated at 25℃, *E. tarda* in the VBNC state was resuscitation TSA even 30 days past complete induction of the VBNC state at 10℃. Depending on the conditions of resuscitation and the storage period of the VBNC cells, resuscitation periods were varied from 1~4 days. The characteristics of the resuscitated cells were consistent with the original *E. tarda* confirmed by API test and PCR products with specific primers.

PP-190

Molecular cloning and functional characterization of serum amyloid P component (SAP) in rock bream, *Oplegnathus fasciatus*

°Seong Don Hwang[1], Mi Young Cho[1], Kwang Il Kim[1], Yeoung Hwan Jang[1], Dong Hee Jo[2], Kwang-Min Choi[2], Ju-Won Kim[2], Ji-Min Jeong[2], Bo-Young Jee[1], Chan-Il Park[1] and Myoung-Ae Park[1]

[1]Aquatic life disease control division, National Fisheries Research & Development Institute, Busan 619-902, Korea

[2]Department of Marine Biology and Aquaculture, Gyeongsang National University, Tongyoung 650-160, Korea

Serum amyloid P component (SAP) plays an important role in inflammation response. In mammals, SAP binds to microbial polysaccharides, matrix components, necrotic and apoptotic cells. Consequently, it can activate complement by the classical pathway and modulate the behaviour of several immune cells. However, little is known about molecular and functional characterization of SAP in fish. To understand the potential roles of SAP in the immune system of fish, we cloned and investigated the gene expression of SAP from rock bream (*Oplegnathus fasciatus*) (RbSAP). Furthermore, the functional ability of RbSAP was analyzed using recombanant SAP protein. The coding region of RbSAP cDNA was 687 bp, encoding 228 amino acid residues. The gene consisted of a signal peptide and a pentraxin domain. The phylogenetic analysis revealed that RbSAP gene was classified into the other known SAP cluster. RbSAP was highly expressed in the liver of healthy rock bream. The pathogen experimental exposure led to differential pattern of gene expression in the tissues. RbSAP gene was highly induced in the spleen following infection with *Streptococcus iniae* and red seabream iriovirus (RSIV). In liver, RbSAP gene was highly induced following infection with *Edwardsiella tarda* and RSIV. The high concentration of recombinant RbSAP highly inhibited the growth of the *S. iniae* without Ca^{2+}. The growth of *E. tarda* was slightly inhibited by recombinant RbSAP in the presence of the Ca^{2+}. The agglutination of *E. tarda* and *S. iniae* by recombinant RbSAP was observed in presence of the Ca^{2+}. Therefore, these results suggest that RbSAP plays an important role in immune response against invading pathogens.

PP-191

Genetic relevance between aquatic animal viruses derived from fish, shellfish and seawater

°Kwang Il Kim[1], Mi Young Cho[1], Seong Don Hwang[1], Yeoung Hwan Jang[1], Bo-Young Jee[1], Hyun Do Jeong[2]and Myoung-Ae Park[1]

[1]*Aquatic life Disease Control Division, National Fisheries Research and Development Institute, Busan 619-902, Korea,*
[2]*Department of Aquatic Life Medicine, Pukyong National University, Busan 608-737, Korea*

After viral disease occur on aquaculture farms, viruses released into the seawater from viral-infected aquatic animals can re-infected other susceptible hosts or retained in vector or reservoir species. Filter-feeding organisms can accumulate various substances including viral agents such as human enteric virus and aquatic animal viruses. Additionally, the viruses are generally present in the shellfish and the ambient water. Hence, surveillance of aquatic animal viruses in susceptible hosts, shellfish, and seawater is important for adequately assessing prevention measure of aquatic animal disease. In this study, we investigated megalocytivirus, MABV, VHSV, VNNV and WSS from seawater and shellfish using multiplex nested PCR. We also investigated a genetic relevance between viruses derived from fish, seawater, and shellfish. A variety of aquatic animal viruses were identified in seawater and shellfish regardless of sampling site and time. In addition, two or more viruses co-existed in some shellfish samples compared to seawater samples. These results reveal that shellfish might accumulate several pathogens over the long-term and could play roles as reservoir of viruses derived from aquatic animals. The phylogenetic analysis revealed that megalocytiviruses in seawater and shellfish were categorized into two subtypes (II and IV), subtype II including the IVS-1 and RBIV-TY-1 strains and subtype IV including FLIV known as the main strains found in epizootic aquatic farms in Korea. Of note, two subtypes, II and IV, co-existed in one shellfish specimen. This result suggests that shellfish can co-accumulate several pathogens over the long-term. The VHSV in shellfish belonged to VHSV subtype IVa, which is commonly detected from VHSV-infected flounder in Korea. Interestingly, the barfin flounder nervous necrosis virus (BFNNV), an unknown virus in Korea, was identified in shellfish. This result indicates that a novel subtype of VNNV has been introduced to Korea. Genetic analysis between viruses derived from fish, seawater, and shellfish indicated that the viruses released into seawater from infected hosts were captured by the shellfish.

PP-192

Isolation and culture condition optimization and antibacterial effect of *Bacillus amyloliquefaciens* JFP-2

°Dong-Hwi Kim, Kyung-Mi Moon, Ji-Woon Jeong, Moon-Soo Heo

Department of Aquatic Biomedical Sciences and Marine and Environment Research Institute, Jeju National University, Jeju 690-756, Republic of Korea

Jeju fermented foods were used in the isolation of *Bacillus amyloliquefaciens,* designated as JFP-2. Morphological identification was done with Scanning Electron Microscope(SEM), which reveals the length and width of single bacilli as 1.5μm and 0.7μm respectively. Biochemical studies confirmed that the isolated strain as Gram negative bacteria. Optimal culture conditions such as temperature and pH of JFP-2 ranged from 30 to 35°C and 7 to 9 respectively; added $MgSO_4.7H_2O$ serve as mineral salts, yeast extract for nitrogen and saccharose as carbon source. Antibiotic sensitivity assay shows that JFP-2 was susceptible to eight antibiotics. Antibacterial assay confirm that JFP-2 has significant antibacterial effect when used against four fish pathogens namely *Photobacteriumdamselase* sub sp., *Edwardsiellatarda*, *Streptococcus parauberis*, *Photobacteriumphosphoreum*. Hence, the isolated JFP-2 could be effectively used in the aquatic diseases management.

PP-193

The antibacterial activity against Fish pathogen of MK-11 isolated from Jeju coastal

°Min-Sun Kim, Subramanian Daraneedharan, Moon-Soo Heo

Department of Aquatic Biomedical Sciences and Marine and Environment Research Institute, Jeju National University, Jeju 690-756, Republic of Korea

Antibacterial activity of 14 marine bacterial strains isolated from Jeju Island, was screened against four fish pathogens namely, two Gram-positive: *Streptococcus iniae, Streptococcus parauberis* and two Gram-negative: *Vibrio anguillarum, Edwardsiellatarda*. Results revealed that MK-11 were found to antibacterial activity against Gram-positive bacteria, particularly *S.iniae* was more susceptibility with the MIC value of 250 µl/ml. Morphological and biochemical identification of MK-11 were done along with 16S rDNA sequence analysis. The results of these studies reveals that the MK-11 is *Paenibacilluspolymyxa* (98%) showed a similarity. Hence, the present study show that *Paenibacilluspolymyxa* isolated from Jeju sea waters contain antibacterial activity and could be a potential antibacterial against Gram-positive fish pathogens.

PP-194

Development of Loop-mediated isothermal amplification (LAMP) for Detection of *Streptococcus parauberis*

°Kyung-Mi Moon,So-Hyun Park, Moon-Soo Heo

Department of Aquatic Biomedical Sciences and Marine and Environment Research Institute, Jeju National University, Jeju 690-756, Republic of Korea

This technique Loop-mediated isothermal amplification (LAMP) relies on autocycling strand displacement DNA synthesis without template denaturation steps under isothermal condition. PCR method of diagnosis using modern equipment and reagents makes its more costly along with maintenance expense. So, LAMP has several advantages such as ease of cost-effectiveness along with the possibility for the maintenance of and isothermal water bath, oven, heathing, cabinet, such as low-cost equipment without requiring expensive equipment. In this study, total five designed random primers was performed using for BLAST program with Sigma factor (Genbank accession number: CP0024711) of DNA oligonucleotide primer of *Streptococcus parauberis*. We was selected high elongation in two random primer and optimum reaction conditions such as temperature, time and sensitivity were established and the condition was confirmed with conventional PCR. Results shows that no significant influence was found with non-target DNA amplification under isothermal conditions both with LAMP as well as conventional PCR and SYBR-green I, hence LAMP could be conveniently employed in the diagnosis of *S. parauberis*, a marine fish pathogen.

PP-195

Phylogenetic diversity of Bacterial community inhabited in Marine sponge *Callyspongia elegans*

°So-Hyun Park, Dong-Hwi Kim, Moon-Soo Heo

Department of Aquatic Biomedical Sciences and Marine and Environment Research Institute, Jeju National University, Jeju 690-756, Republic of Korea

The aim of this study was to investigate the Bacterial community inhabited in *Callyspongiaelegans*.Marine bacteria were isolated from the marine sponge *C. elegans* using marine agar. The resulting 112 isolated pure cultures were then used for further study. They were characterized by determining morphological characteristics through Gram's staining and morphologicalobservation. The colony pigments of bacterial isolates were characterized as yellow, brown, ivory, and white. Thirty-seven strains were found to be Gram-positive and 75 strains were Gram-negative. Seventy-nine strains were coccus-shaped, while 16 strains were rod-shaped. On the basis of the results of the comparative analyses of 16S rDNA gene sequences, the 112 isolated bacteria were divided into 5 major groups: *Alphaproteobacteria*(39%), *Gammaproteobacteria* (22%), *Actinobacteria*(14%), *Fimicutes* (9%), and *Bacteroidetes* (6%). It is strongly suggested that fifteen isolates are candidates for a new genera or species, based on the analyses of 16S rDNA gene sequences.

PP-196

Antibacterial effect of three rhizobacterial strains against fish bacterial pathogens

°Ji-Woon Jeong, Min-Sun Kim, Moon-Soo Heo

Department of Aquatic Biomedical Sciences and Marine and Environment Research Institute, Jeju National University, Jeju 690-756, Republic of Korea

*Paralichthysolivaceus*an important aquaculture fish species in Jeju Island, South Korea. Due to intensification of the flounder culture, farmers use huge amounts of chemical antibiotics againstseveral fish diseases.This leads to many harmful side effects to fish as well as human consumers. Hence, an alternative method of disease control is needed without using chemical antibiotic agents.In this study,three strains of rhizobacteria such as BRH433-2, TRH415-2 and THJ609-3were isolated from the rhizosphere of plants and they were assayed for their antibacterial activity against fish pathogensnamely, *Streptococcus iniae*, *S.parauberis*, *Vibrio anguillarum* and *Edwardsiellatarda*.Assay was done with crude culture broth (without cell separation), with separated culture supernatant and with cell pellet. Of which, cell pellet suspension shows significant antimicrobial activity when compared with that of crude culture and supernatant. The results indicate that the isolated three rhizobacterial strains have antibacterial effect in cell suspension, which could be potentially used in the aquaculture diseases management.

PP-197

Effect of water temperature to produce protective immune against viral haemorrhagic septicemia(VHS) vaccine in olive flounder (*Paralichthys olivaceus*)

°Je-Won Ryu, Sung-Ju Jung
Department of Aqualife Medicine, Chonnam National University
Aquatic Animal Hospital, Chonnam National University

VHS causes significant economic loss to the flounder aquaculture industry in Korea. The disease occurs mainly during March-April in changing water temperatures of 8-15℃, which cause severe mortality up to 50-70% in culture systems. In case of fish (poikilotherms), immunity is affected by various environmental factors, in particular by water temperature, and it has been known that developinga specific immunity is difficultat low water temperature. We investigated the suitable water temperature to obtain protective immunity in VHS infected olive flounder using squalene (5%) and aluminum hydroxide (0.5%) containing inactivated viral haemorrhagic septicemia virus(VHSV). Vaccinated fish was reared respectively at 10, 13, 15 and 20℃and injected with VHSV ($10^{7.8}TCID_{50}$/fish) at 10, 20and 40 days post vaccination (dpv) at 15℃. Vaccinated fish showed significant protection at all water temperature conditions (10-20℃), showing high relative percent survival (RPS) at high water temperatures. In 10 dpv groups had RPS rates of 42, 50 and 58% (10, 13 and 15℃ respectively) and 20/40 dpv groups showed comparatively high RPS (64/80, 79/87 and 93/93%) and obtained protection. These results indicate that vaccinated fish can induce protection against VHS at a wide range of water temperatures (even low water temperature at 10-15℃), and can provide protection to control disease outbreaks.

PP-198

Efficacy of *Solanum nigrum L* extract for Viral hemorrhagic septicemia virus (VHSV) replication in fathead minnow cell line and *Paralichthysolivaceus*

°Han-Kook Yang[1,2], Satheesha Avunje[3],Young Bae Ryu[4], Sung-Ju Jung[1,2]

[1]Department of Aqualife Medicine, Chonnam National University

[2]Aquatic Animal Hospital, Chonnam National University

[3] Central Institute of Brackish water Aquaculture, Chennai, India

[4] Korea Research Institute of Bioscience and Biotechnology (KRIBB)

Viral hemorrhagic septicemia virus (VHSV) is a RNA virus belonging to the genus *Novirhabdovirus* in the family Rhabdoviridae and causes severe mass mortalities in aquaculture industry between 8 and 15℃. Antiviral activity of*S.nigrum L*extract has been reported for hepatitis C virus. In this study, inhibitionefficiency of *S.nigrum L*extract against VHSV replication in fathead minnow (FHM) cell line and olive flounder was evaluated. FHM cell line incubated with media containing VHSV ($10^{2.8}$ $TCID_{50}$/ml) at 15℃ for 6hr and 0.5, 1, and 2 μg/ml of the extract were treated to each well. Inhibition rate at 0.5, 1, and 2 μg/mlof the samples treated with *S.nigrum L*extractat 12and 24hr were 90.9/39.4/27.2% and 62.6/33.6/28.9%, respectively. Repeated experiment showed similar results and inhibition rates were 78.5/35.7/14.2% and 68.7/27.0/27.0%, respectively for the respective time points. The data showed that 0.5 μg/ml could highly inhibit viral replication in FHM cell line. Hence, the resistance of olive flounder against VHSV were investigated by oral administration of *S.nigrum L* extract to olive flounder 10, 100, 1000 mg/g/day for 7 days, and then exposed to VHSV at 15℃ and had mortality rate of 70, 75 and 65%, respectively. In positive control fish, 80% of mortality was observed. Although, few fish could recover from viral infection, most of the fish succumbed to disease ultimately. Thus, more trials are needed especially administration dose and the protection period. Data clearly demonstrated the inhibition of VHSV replication by *S.nigrum L*extract*in vitro* and possibility in developing preventive measure against VHSV using the extract.

PP-199

Effect of virus infectivity titer following centrifugation and filtration during virus extraction from fish samples

°Wi-Sik Kim[1], Jong-Oh Kim[1], Mamoru Yoshimizu[2], and Myung-Joo Oh[1]

[1]Department of Aqualife medicine, Chonnam National University, Korea

[2]Faculty of Fisheries Sciences, Hokkaido University, Japan

A 0.45 μm membrane filter is generally used to remove bacterial contamination during virus extraction from fish samples. However, fish viruses are drastically reduced after filtration with a 0.45 μm filter. In this study, we investigated the effect of virus infectivity titer by filter and the change in virus titer and bacterial number following different centrifugation conditions to determine a suitable procedure for virus extraction from fish samples. The $10^{4.05}$and $10^{5.05}$ $TCID_{50}$/ml of infectious hematopoietic necrosis virus (IHNV) and $10^{4.05}$and $10^{4.55}$ $TCID_{50}$/ml of *Oncorhynchusmasou*virus (OMV) were not detectable after filtration with two types of 0.45 μm filters, except the IHNV titer was reduced about 10 fold by the filter (company A). No significant difference was found in the virus titer following centrifugation at 880 × *g* (30 min) or 3,500 × *g* (30 min), whereas IHNV and OMV titers were reduced about 10 and 10–1000 fold by centrifugation at 14,000 × *g* (30 min) and 14,000 × *g* (10 and 30 min), respectively. A total of 97.7–99.9% *Escherichia coli* were eliminated by centrifugation at 880 × *g* (30 min) and 3,500 × *g* (30 min). These results show that fish viruses were affected by filtering, even though the effect differed by virus species and filter type. Therefore, centrifugation at 3,500 × *g*(30 min) and use of medium with antibiotics may be useful for virus extraction together with a reduction in bacteria.

PP-200

Correlation of water temperature shifting and virus replication pattern in *Megalocytivirus*-infected rock bream (*Oplegnathus fasciatus*)

°Myung-Hwa Jung[a,b], Chamilani Nikapitiya[a], Myung-Joo Oh[a], Sung-Ju Jung[a,b]

[a] Department of Aqualife Medicine, Chonnam National University

[b] Aquatic Animal Hospital, Chonnam National University

Rock bream iridovirus (RBIV), which is a member of the *Megalocytivirus* genus, causes severe mass mortalities in rock beam. Mortality due to RBIV infected rock bream at susceptible water temperature (23°C or 26°C; 100% mortality condition), could control by reducing water temperature to 17°C (mortality free condition) during very early stages of infection. Time required to completely eliminate virus from the fish body needs to be study in detail to use the condition to save fish from the mortality. Hence, virus replication pattern against water temperature shifting conditions by analysing RBIV MCP copy number at 2, 4, 7, 10, 15, 20, 22, 25, 28, 30, 40, 50, 60, 70 and 100 days post infection (dpi) was evaluated. Rock bream exposed to virus and held for 2 (group A), 4 (group B) and 7 days (group C) at 23°C before water temperature was reduced to 17°C had mortality rates of 0, 0 and 28%, respectively, until 100 dpi. Although, mortality was observed only in group C and one fish died each day at 24, 25, 26, 27 and 35 dpi, the virus copy number increased until reaching to a maximum from 20 d to 22 dpi (10^6 – 10^7/μl) then reduced from 25 dpi in all groups. Between 25 d to 30 dpi, most of the fish (82.8%) exhibited low virus copy number (range of 10^2 – 10^4/μl), whereas other fish (11.4%) exhibited high virus copy numbers (range of 10^6 – 10^7/μl) in all groups. Virus replication pattern demonstrated by RBIV MCP copy number showed that 25 d to 30 dpi is the important time points where crucial host immune responses occur. In group A and B, between 30 d to 100 dpi showed no clinical signs of RBIV disease and reduced virus copy number (average 10^6 reduced to 10^1/μl). These time points indicate that RBIV could eliminate slowly from the fish body and virus completely eliminate under the threshold of causing mortality. When surviving fish had the water temperature increased from 17°C to 26°C at 70 dpi, they did not exhibit signs of disease and had low virus copy numbers (below 10^2/μl at 120 dpi). Fish need at least 70 days to eradicate virus from fish body to the virus numbers not to activate again. These results suggest that once virus decrease under limit threshold to cause mortality fish could survive in susceptible water temperature condition.

PP-201

Megalocytivirus, FLIV (flounder iridovirus) isolated from olive flounder, *Paralichthys olivaceus* does not cause high mortality

°Myung-Hwa Jung, Sung-Ju Jung
Department of Aqualife Medicine, Chonnam National University
Aquatic Animal Hospital, Chonnam National University

The genus *Megalocytivirus*, represented by red sea bream iridovirus (RSIV) was first recorded in cultured red sea bream (*Pargus major*) in Japan from 1990 (Inouye *et al*, 1992). Since first outbreak, various RSIV-like viruses including rock bream iridovirus (RBIV) in rock bream *Oplegnathus fasciatus* at 1998, turbot iridovirus (TBIV) in turbot *Psetta maximus* (L.) at 2003 and flounder iridovirus (FLIV) in olive flounder at 2003 were reported from Korea (Jung and Oh, 2000; Kim *et al*, 2005; Do *et al*, 2005). However, mass mortality due to *Megalocytivirus* outbreak has been reported annually only for rock bream against RBIV. In September 2013, FLIV infected juvenile olive flounder from Young-Gwang area at the west coast of the Korea was identified. During epizootics, the water temperature was 24 – 25°C. Affected fish showed typical clinical signs and characteristic histopathological signs (enlarged basophilic cells in various tissues) of Megalocytiviral disease, especially with high virus major capsid protein (MCP) copy number at 10^6 – 10^7 in spleen and kidney tissues filtrate. In this incident, the estimated mortality of the olive flounder was over 70% of total fish number (3 million). However, pathogenicity of FLIV against olive flounder is not clearly understood. Present study carried out to assess mortality rates and virus replication pattern of olive flounder against FLIV. The olive flounder injected with FLIV (ranging from 1.9×10^4 – 6.5×10^6/100 μl) and held at 24°C survived until 90 days post infection (dpi) suggesting pathogenicity of olive flounder to FLIV is very low and possibility is less to cause mass mortality due to FLIV infection. It was evident in this study, when fish exposed to FLIV, virus replication in their body was not reached up to critical levels (range of 10^7/μl) during experimental period. Furthermore, olive flounder injected with FLIV and then exposed to stress conditions (acute water temperature change, overfeeding, high density culture condition and poor water quality) had high mortality rates. However, they did not exhibit signs of disease and had low virus copy numbers (ranging from 2.1×10^3 – 8.4×10^4/μl). Thus, it could suggest that FLIV outbreak in olive flounder may induce not only by FLIV alone may also involve environmental factors and co-infection of other pathogenic microorganisms.

PP-202

Effect on energy metabolism related genes transcription in Megalocytivirus (family *Iridoviridae*) infected rock bream (*Oplegnathus fasciatus*) during infection.

°Chamilani Nikapitiya[1], Myung-Hwa Jung[1,2], Sung-Ju Jung[1,2] and Myung-Joo Oh[1]

[1] Department of Aqualife Medicine, Chonnam National University, Chonnam 550-749, Korea

[2] Aquatic Animal Hospital, Chonnam National University, Chonnam 550-749, Korea.

Rock bream (*Oplegnathus fasciatus*) mass mortality (100%) occur at its optimum water temperature (ranging from 23-27°C), when they infected by rock bream iridovirus (RBIV) belong to the genus *Megalocytivirus* (family *Iridoviridae*). Immune defense mechanism of rock bream against RBIV has been studying widely by transcriptional analysis of immune genes. No studies have been focused on metabolism, though it plays an important role in animal's physiology and immune responses of animals require energy for the optimal functioning of each line of defense when fighting or controlling any pathogenic infection. This prompted to investigate the expression pattern of energy metabolic genes in rock bream following the infectious stages of RBIV. In this study, mRNA expression patterns of energy metabolism (Glucose-6-phosphatase (Rb-G6Pase), Glucose-6-phosphate dehydrogenase (Rb-G6PDH), Pyruvate kinase (Rb-PK), Pyruvate dehydrogenase (Rb-PDH), Lactate dehydrogenase (Rb-LDH), Succinate dehydrogenase (Rb-SDH)), and detoxifying/antioxidant (Glutathione peroxidase (Rb-GPX) and Glutathione-S-transferase (Rb-GST)) genes of RBIV infected rock bream at 26°C were analyzed in kidney by real time polymerase chain reaction. Rb-G6PDH and Rb-PK showed higher transcriptional responses than the control (un-infected) at early time points (6h, 12h, d1 and 4dpi) which decreased to basal at later time points (8d and 10dpi). Even though, significantly higher Rb-G6Pase and Rb-PDH were observed at 4d, 8d and 10dpi, expression trend was decreasing. Increased Rb-SDH with basal expression of Rb-G6PDH and Rb-LDH at 8d and 10dpi evident that no anaerobic respiration, indicating no high energy requirement up to 10dpi. Significantly down-regulated Rb-GPX and Rb-GST were observed when virus copy number was peaked at 10dpi. Basal expression of metabolic genes may not due to oxidative stress however, a question arises whether it is adequate to maintain energy consumption in the host required for immune responses to fight against virus infection. Basal or lack of enhanced energy metabolism gene transcription at later stages could be one reason for the 100% fish mortality which needs to be confirmed with rock bream survivors in future.

PP-203

Transcriptional analysis of MHC class I presentation pathway genes in response to Megalocytivirus (family *Iridoviridae*) in rock bream (*Oplegnathus fasciatus*) at high mortality water temperature

°Chamilani Nikapitiya[1], Myung-Hwa Jung[1,2], Jehee Lee[3], Myung-Joo Oh[1] and Sung-Ju Jung[1,2]

[1] Department of Aqualife Medicine, Chonnam National University, Chonnam 550-749, Korea

[2] Aquatic Animal Hospital, Chonnam National University, Chonnam 550-749, Korea.

[3]Department of Marine Life Sciences, Jeju National University, Jeju, 690-756, Korea

Infectious rock bream iridovirus (RBIV) belongs to Megalocytivirus is the causative agent of rock bream iridovirus disease, causing mass mortality in aquaculture industry especially to rock bream in Korea. Cellular immunity is critical in the host control of virus infections. Appropriate regulation of MHC expression is important for effective protection against viral infection. The recognition of the MHC-peptide complex on plasma membrane by a T-cell receptor (TCR) which is specific for a given antigenic peptide bound to specific MHC class I molecule eventually leads to T cell activation. Alterations in MHC class I expression could impaired T-cell responses. However, no interaction of RBIV and the MHC class I pathway of rock bream had yet been convincingly shown. This study shows the influence of RBIV infection at high mortality water temperature effects on cytotoxic T lympocyte responses via transcriptional analysis of several genes related to stages of the MHC class I presentation pathway. Fold change analysis of gene expression was applied to several genes involved in key stages of the MHC class I presentation pathway: (i)protein breakdown (Rb-*PSME)*; (ii)peptide transport (Rb-*TAP1*); (iii)peptide loading and editing (Rb-Tapasin); and (iv) MHC class I structures (Rb-MHC class Iα and Rb-β*2m*) and finally T cell responses by Rb-CD8β^{+}. Rb-MHC class Iα expression was higher at 6h, 12h, 4d, 8d and 10d post infection (p.i.) and transcription reached peak levels at d4 (16.7-fold that of the control), when RBIV 'major capsid protein' copy numbers increased. Rb-β2m transcription was basal until 2d, and significantly higher than the control at 4d and 8dp.i. when many enlarged cells formed in the internal organs. Initiation of increased CD8β expression compared to the controls from 8dp.i. onwards suggests a delayed response of CD8β transcription. Although examined gene responses not interfere by RBIV replication, the delayed responses (in Rbβ2m and CD8β) may a reason for high mortality in RBIV infected rock bream.

PP-204

Occurrence of philometroides nematode infection of cultured rockfish *Sebastes schlegeli* in Cheonsu Bay of the west coast in Korea

°Han-Gill Seo[1], Jung-Soo Seo[1], Min-Kyung Ryu[1], Eun-Hye Lee[1], Se-Ryun Kwon[2], Jong-Soon Kang[3], Yun-San No[3], Hye-Sung Choi[1], Sung-Hee Jung[1] and Hyun-Ja Han[1]

[1]Pathology Division, National Fisheries Research & Development Institute

[2]Department of Aqualife Medicine, Sun Moon University

[3]Chungnam Fisheries Management Office

We investigated a new type of philometroides nematode infection of cultured rockfish,*Sebastes schlegeli* in Cheonsu Bay of the west coast in Korea from May 2013 to April 2014. Philometroides nematode was infected in epithelial tissue of various external organs, such as fins, operculum, nares, mouth and head. For the period of one year, total infection rate of nematode in rockfish was 55% (*n*= 89/163), which comprised in 56.7% (*n*= 17/30) in May 2013, 88% (*n*= 29/33) in August 2013, 0% (*n*= 0/30) in October 2013, 70% (*n*= 21/30) in January 2014 and 55% (*n*= 22/40) in April 2014, respectively. During this study, there are no mass mortalities of cultured rockfish in Cheonsu Bay except in August 2013. In August 2013, we identified that the skin wounds of the rockfish were caused by the nematode escape from their host: the accumulated mortalities for 2 weeks were recorded as 1.4~22.4% in each farm during this period. In addition, several pathogenic bacteria (*Photobacterium damselae*, *Vibrio* spp. and *Streptococcus iniae*) also isolated from all moribund rockfish, which thought to be transmitted through the skin wounds due to the nematode.

PP-205

Effects of cimetidine on vaccine efficacy of orally administered live auxotrophic *Edwardsiella tarda* mutant in olive flounder (*Paralichthys olivaceus*)

°Yue Jai Kang[1], Jun Soung Kwak[2], Ki Hong Kim[2]

[1]Department of Aquatic Life and Medical Sciences, Sun Moon University

[2]Department of Aquatic Life Medicine, Pukyong National University

Protection of olive flounder (*Paralichthys olivaceus*) from virulent *Edwardsiella tarda* infection by oral immunization with two auxotrophic genes – alanine racemase gene (*alr*) and aspartate semialdehyde dehydrogenase (asd) gene – knock-out *E. tarda* mutant (*ΔalrΔasd E. tarda*) was previously demonstrated. In the present study, we investigated the effects of cimetidine, a histamine$_2$ (H_2) receptor antagonist, on the arrival of the live auxotrophic *E. tarda* mutant to the intestine of olive flounder and on the protective efficacy of the live *ΔalrΔasd E. tarda* oral vaccine.

In the experiment to determine optimal administration time of cimetidine, fish administered cimetidine at 3 h before the administration of the *E. tarda* mutant showed the highest bacterial colony number from the intestine. In the experiment to determine optimal dose of cimetidine, the groups of fish administered 100 mg or 200 mg of cimetidine per kg of fish showed significantly higher CFU numbers in the intestine compared to the group intubated with cimetidine 10 mg or 50 mg per kg of fish. However, as there was no significant difference between cimetidine 100 mg and 200 mg groups, a dose of 100 mg per kg of fish was chosen as the optimal dose of cimetidine.

In the oral vaccine efficacy experiment, the group of fish administered the live auxotrophic *E. tarda* mutant in combination with the above optimal regime of cimetidine showed the highest serum agglutination activity and survival rates, suggesting that cimetidine can be used to enhance the protective efficacy of the oral live bacterial vaccines in fish. To our knowledge, this is the first study that demonstrated cimetidine-mediated enhancement of protective efficacy in oral vaccine of fish.

PP-206

The first case of rescue, care and release of finless porpoises, *Neophocaena asiaeorientalis*, in Korean waters

°Kyum Joon Park[1*], Young Ran Lee[2], Yong Rock An[1], Hyun Woo Kim[1], Doo Nam Kim[1], Doohae An[1], and Yeonghey Kim[1]

[1]Cetacean Research Institute, National Fisheries Research & Development Institute

[2]Exhibiteducation Team of Lotteworld Aquarium, Hotellotte Lotteworld

Finless porpoise is the most abundant marine mammal in Korean waters, especially in the West and South coast. The bycatch number of this animal in Korea was combined into a total of 2,000 animals in 2012. In December 2011, there were two reports from fishermen in Tonyoung, Korea that they found a single finless porpoise was trapped in their fixed shore nets. Cetacean Research Institute (CRI) and Busan Aquarium which designated as a rescue and cure organization for marine animals, rescued these two animals and accommodated in the facility of Busan Aquarium because all they are exhausted and needed care. We feed them several kinds of fishes with some nutrient supplements and removed some parasites on the fluke of one finless porpoise. Passing 6 months of cure and care, we decided to release them to where they came from. We release them with a spaghetti tag each of them to identify individual, after one month wild adaptation in Tongyong.

PP-207

Parasitic infection Cases of finless porpoises (*Neophocaena asiaeorientalis*) in Korean waters

°Youg Ran Lee[1*], Kyum Joon Park[2], Yong Rock An[2,] Tae-Geon Park[3], Yeonghye Kim[2]

[1]ExhibiteducationTeam of Lotteworld Aquarium , HotelLotteLotteworld

[2]Cetacean Research Institute, National Fisheries Research & Development Institute

[3]Education Research Team, Korea Institute of Maritime and Fisheries Technology

Finless porpoise is the one of porpoises in Korean waters that frequently observed in the coastal area. This study reported parasitic infection cases of stranded finless porpoise, *Neophocaena asiaeorientalis* which was stranded on the Saemangeum Dike on the west coast of Korea 21 May, 2012.The finless porpoise was male, and estimated is 8 years old.Parasites were found in abdominal cavity, skull and lung.The parasiteswere identified as nematode, trematoda and lungwarm.Nematoda in abdominal cavity was Crassicauda sp. Trematoda found in the skull was indentified Nasitrema sp. Lungwarm in lung seemed one of genus Pseudaliids.

PP-208

Tracking the released marine mammals

°Yong-Rock An, Kyum Joon Park, Hyun Woo Kim, Doo Nam Kim, Doohae An
Cetacean Research Institute, National Fisheries Research and Development Institute

It is important to track released marine mammals in order to confirm whether the animals adapt themselves to new circumstances in the wild. But marine mammals are the most difficult animals to track due to their wide distribution, diving behavior and limited accessibility. Therefore, more and more scientists depend on various types of satellite tags that can give information on animal's location, swim speed, other environmental factors including water depth, water temperature, salinity, etc. without going out to the sea. Several marine mammals have been rescued, rehabilitated and released to the wild in Korean waters recently. We have attached 3 types of satellite tags to two Indo-Pacific bottlenose dolphins, a finless porpoise and a spotted seal. The tags attached to the Indo-Pacific bottlenose dolphins were detached in a week after releasing because fast swimming and jumping behavior of the dolphins probably made dragging effect to the tag. In case of the finless porpoise, the tag was attached to a cloth jacket because the animal has no place to fix a tag on its body. But the jacket was taken off as soon as the animal was released. On the other hand, the tag on the spotted seal has transmitted location data for 8 months which revealed a new migration route from Peter the Great Bay, Russia to Bohai Sea, China through Korean waters. It is necessary to understand body shape, skin type, swimming behavior and other physiological features of the marine mammals for successful attachment of satellite tags. Also we need knowledge on side effects of tagging like infection and stress. When the proper treatment and medication will be added to the tagging, we can expect more successful tracking the released marine mammals.

PP-209

Characterization of polymorphism based on repetitive sequence in flounder iridovirus

°Young Chul Kim[1], Woo Ju Kwon[1], Iseul Kim[1], Ji Hee Byun[1], Min Ji Yoon[1], Hyun Do Jeong[1]

[1]Department of Aquatic Life Medicine, Pukyong National University, Busan 608-737, Korea

Genomes of *Megalocytivirus* are circularly permuted and terminally redundant, the only eukaryotic viruses with this feature, and various repetitive sequences have been identified in the genomes.We examined the various sizes of amplicon in PCR with a single set of primers derived from an open reading frame, ORF-2, in the *Megalocytivirus* obtained from olive flounder (*Paralichthys olivaceus*) cultured in Korea. This is the first report of polymorphism on repetitive sequence in *Megalocytivirus*-subgroup IV isolated flatfishes. From sequence analysis of the multiple amplicons, we demonstrated the presence of distinct genomic polymorphisms in the ORF-2 gene with differing numbers of repetitive element of 60 amino acids or 69 amino acids. 2-step PCR with the cloned plasmid templates of three different sizes of produced amplicon and mixed templates of these three cloned plasmids did not produce any PCR product with a length different from the original templates and suggested the evidence of no artifacts in 2-step PCR for repetitive sequences. Moreover, we did not observe the disappearance of any different lengths of amplicon in PCR with template DNA obtained from tissue homogenate incubated more than 30 minutes at 25℃. These results implied that the observed amplicons are not derived from artifacts of PCR, and viral DNAs used as template are present in viral particles rather than as a naked nucleic acid. In monitoring experiments, the same pattern ofthree major amplicon bands of polymorphism in PCR for ORF-2 region were found in comparison of each other 14 FLIV isolates in marine fishes from 2003 to 2013. Additionally, from 2006 to 2009, 16 FLIV isolates obtained from shellfish known as a suspected reservoir of viruses released from infected fish also showed the same polymorphism in ORF-2 region except few isolates showing a single or double amplicon bands in gel electrophoresis for polymorphism after PCR.

PP-210

Changes in the blood parameters of the finless porpoises (*Neophocaena asiaeorientalis*) kept the aquarium

°Myoung Sug Kim[1*], Doo Nam Kim[2], Hye-Sung Choi[1], Doohae An[2], Myoung Ae Park[3], and Sung Hee Jung[1]

[1]Pathology Division, National Fisheries Research & Development Institute

[2]Cetacean Research Institute, National Fisheries Research & Development Institute

[3]Aquatic Life Disease Control Division, National Fisheries Research & Development Institute

In this study, we report the hematological, biochemical and hormonal parameters in the finless porpoises (*Neophocaena asiaeorientalis*) kept at the aquarium. Finless porpoise is the one of porpoises distributed in Korea coast. Between December 2011 and Jun 2013, blood samples were taken from four finless porpoises. Thirteen hematological blood parameters, included white blood cells (WBC), red blood cells (RBC), hemoglobin (Hb), hematocrit (Hct), mean corpuscular volume (MCV), mean cell hemoglobin (MCH), mean cell hemoglobin concentration (MCHC), neutrophil, eosinophil, basophil, monocytes, lymphocytes, platelets were investigated. Serum samples were analyzed for sixteen constituents, alanine transaminase (ALT), asparatate transaminase (AST), alkaline phosphatase (AP), gamma glutamyl transferase (GGT), lactate dehydrogenase (LDH), total protein, albumin, total bilirubin, glucose, sodium, potassium, chloride, calcium, phosphate, cortisol and total thyroxin (T4). Hematological, serum biochemical and plasma hormonal analyses were informative and objective way to evaluate the healthy and physiological status of finless porpoises.

PP-211

Effects of Alpha lipoic acid (ALA) on non-specific immune responses of nile tilapia, *Oreochromis niloticus*

°Yo-Sep Hwang, Chang-Ju Kim, Su-Hwan Park, Sang-Hoon Choi*
Department of Aquatic Life Medicine, KunsanNational University

This study investigated the effects of ALA on non-specific immune responses in tilapia. Tilapia were treated for 4 days with different concentrations of ALA by an oral administration, an intraperitoneal injection and an immersion. The overall results showed that ALA enhanced a respiratory burst and lysozyme activity of tilapia. Also the oral administration appeared to the most effective route in enhancing non-specific immune responses in tilapia. When fed with a diet containing different concentrations of ALA (5, 15 and 30 ㎎ ALA/kg diet) for 20 days, all non-specific immune parameters tested in the study were enhanced in all groups in comparison to the control group. The most effective dietary dose of ALA was 15 ㎎ ALA/㎏ diet. The antibacterial effect of ALA in *E. tarda* challenged tilapia fed ALA-supplemented diet was only significantly enhanced. In conclusion, these results indicated that ALA is effective in inducing non-specific immune responses and an antibacterial activity in tilapia. Based on the results, it is considered that ALA could be used as a good feed additive in an aquaculture industry.

PP-212

Transcriptional analysis of antioxidant and HSPs genes in the abalone, *Haliotis discus hannai* exposed to $NiCl_2$ during thermal stress

°EunYoung Min, Yong-Joo Cha, ShinHu Kim, JungSick Lee*, Inn-Sil Kwak**, JaeWon Kim***

and Ju-Chan Kang

Department of Aquatic life medicine, Pukyong National University, Busan 608-737

*Department of Aquatic life Medicine, Chonnam National University, Yeosu 550-749, Korea

**Faculty of Marine Technology, Chonnam National University, Yeosu 550-749, Korea

***Department of Marine Life-Science, Gangwon Provincial College, Gangneung 210-804, Korea

Recently, climate change has been implicated in the increasing frequency and severity of disease outbreaks in marine environments. Nickel is ubiquitous in the biosphere and is common component of natural waters due to erosion and weathering. Excess nickel contamination is hazardous to aquatic ecosystems due to its persistence and bioaccumulation. The Ni^{2+}/ Ni^{3+} redox cycling of Ni results in the formation of oxygen radicals, which can lead to enhanced lipid peroxidation. Experimental evidence has shown that water-soluble nickel compounds such as nickel chloride ($NiCl_2$) have been found to be potent, including oxidative stress and DNA damage (Chen et al., 2003). In aquatic animals, antioxidant enzymes are believed to play roles in detoxification and protection from oxidative damage, as occurs in other aerobic organisms. Heat shock protein (HSP) synthesis is induced by factors of various nature- heavy metals, organic pollutants, changes in ambient temperature, etc. Previous study has shown a marked increase in exercise-induced oxidative stress with a reduced HSP response. Also, they suggested the accumulation of two or more stressors might be the cause of a lower HSP production in fisheries (Iwama et al., 1998). Therefore, the aim of this study was to identify which of $NiCl_2$ and thermal stress coincides with the most significant changes in antioxidant status and HSP 70 and 90 gene response of abalone, *Haliotis discus hannai*.

Abalone, *H. discus hannai* were acclimated for 2 weeks under laboratory condition. Group 1~3 animals were reared in normal seawater at 18, 22 and 26℃, individually. Group 4~6 and 7~9 animals were exposed to seawater containing 0, 200 and 400 μg/L $NiCl_2$, at 18, 22 and 26℃, individually. Abalone was sacrificed to obtain the hepato-pancreas and gills after exposure for 48 hours. After total RNA extraction and cDNA synthesis, PCR amplification was performed on cDNA by using each primer; GPx, TPx, HSP 70 and HSP 90. The oligonucleotide primers are shown in Table 1. Each reaction cycle consisted of incubations at 94℃ for 30 sec, 55℃ for 1 min, and 72℃ for 1min. The PCR products were examined by computerized gel imaging system. Quantitative PCR was conducted in 20㎕ reactions containing QuantiMix SYBR kit using the Real-time PCR.

Chen CY, Wang YF, Huang WR and Huang YT. 2003. Nickel induces oxidative stress and genotoxicity in human lymphocytes. Toxicology and Applied Pharmacology 189(3), 153-159.

Iwama GK, Thomas TP, Forsyth RB and Vijayan MM. 1998. Heat shock protein expression in fish. Reviews Fish Biol. Fish. 8, 35-56.

PP-213

Toxicity evaluation of gallate derivatives on olive flounder *Paralichthys olivaceus* and aquatic ecosystems

◦So Young Kang[1], Wi-Sik Kim[1], Jae-woong Lim[1], Myung-Joo Oh[1], and Woo-Keun Kim[2]

[1]Department of Aqualife Medicine, Chonnam National University

[2]Korea Institute of Toxicology

Scuticociliates are regarded as serious pathogens in marine aquaculture worldwide. Especially, mixed infections of scuticociliates with pathogenic bacteria have been commonly reported in commercially important olive flounder *Paralichthysolivaceus*.In efforts to search for agentshaving anti-bacterial activity as well as anti-scuticociliate activity, we previously found and reported thatgallic acid and propylgallate showed anti-bacterial and anti-scuticociliate activities *in vitro* and *in vivo*. Gallic acid and propyl gallate are antioxidants widely used in foods, cosmetics and pharmaceuticals. In the present study, we evaluated their acute and sub-acute toxicities in olive flounder as well as toxicities on aquatic ecosystems using five model systems from four trophic levels. In the immersion of 50-250ppm for 10days(acute), gallic acid and propyl gallate showed no mortality and no toxicity in serum enzyme(GOT/GPT) and histopathological examination while at 500ppm, both agents showed 100% mortality. In subacutetreatment(30days), gallic acid showed 67% and 27% mortality at 500 and 250 ppm, respectively while propyl gallate exhibited 100% mortality at only 500ppm with no mortality in other doses. Results of histopathological examination and GOT/GPT activities over all the alive fishes from the subacute treatment exhibited that gallic acid and propyl gallate didn't show any toxic effects to the fish. Toxicity investigation for five models (*Vibrio fischeri*, *Dunaliellatertiolecta, Daphnia magna,* FSP & CHSE-214 cell lines*)* composed of four trophic levels over gallic acid and propyl gallate showed that the most sensitive system over both gallic acid propyl gallate was *Dunaliellatertiolecta*(LC_{50}=21.2 and 21.9 ppm, respectively), *followed by Vibrio fischeri, Daphnia magna and* FSP & CHSE-214 cell lines. From these results, we can suggest that gallic acid and propyl gallate may be safe to olive flounder below 250ppm as anti-scuticociliate agents and that ten-fold over dilution of its drainage can them safe to aquatic ecosystems. (This research was supported by the National Research Foundation of Korea(NRF) grant funded by the Korea government(MEST) (No. 2009-0069850)).

PP-214

In Vitro Anti-bacterial and Anti-scuticociliate Activities of Marine Red alga *Polysiphonia morrowii* Extract and its Bromophenols with Structure-Activity Relationships

°So Young Kang, Sang-yun Lee, Jun-ho Choi, and Sung-Ju Jung

Department of Aqualife Medicine, Chonnam National University

Scuticociliates are regarded as serious pathogens in marine aquaculture worldwide. In Korea, they cause mass mortalities in fish such as commercially important olive flounder *Paralichthys olivaceus*. Especially, mixed infections of scuticociliates with pathogenic bacteria have been commonly reported. In efforts to search for natural products having anti-bacterial activity as well as anti-scuticociliate activity from marine algae, we found that 80% methanolic extract of red alga *Polysiphonia morrowii* Harvey has both anti-scuticociliate activity against *Miamiensis avidus* which is one of major causative agents of scuticociliatosis and anti-bacterial activities against fish pathogenic bacteria. Activity-guided fractionation and isolation for 80% methanolic extract of *P. morrowii* yielded three bromophenols which were identified as 3-bromo-4,5-dihydroxybenzyl methyl ether(1), 3-bromo-4,5-dihydroxybenzaldehyde(2) and urceolatol(3) based on spectroscopic analyses. 3-bromo-4,5-dihydroxybenzyl methyl ether(1) showed the highest activities for both anti-bacterial and anti-scuticociliate activities with minimal inhibitory concentration(MIC) of 62.5ppm(against *Vibrio anguillarum*) and minimal lethal conccentration(MLC) of 62.5 ppm(in sea water), respectively. Investigation of both activities of seventeen bromophenol derivatives including isolated three natural bromophenols showed that existence of electron donating group or atom with non-covalent electron pair at C_4 of 2-bromophenol structure may be important in anti-scuticociliate activity. These findings suggest that *P. morrowii* extract and bromophenol derivatives have the possibility to exert as alternatives in anti-scuticociliate therapy of aquaculture.(This research was supported by the National Research Foundation of Korea(NRF) grant funded by the Korea government(MEST) (No. 2009-0076909)).

PP-215

Effect of shape and solidity ratio of traps on their hydrodynamic resistance

Kyoung bum KANG[1], Myung Sung Koo[2] and Suk Jong KIM[2*]

[1]Faculty of Fisheries, Kagoshima University, [2]College of Ocean Science, Jeju National University

Fish traps are traditional and relatively simple fishing equipment that are available in various dimensions, materials, and mesh sizes. There are many major factors that affect the catching of fish with traps. Among these many factors, the shape and the solidity ratio of the trap play an important role in hydrodynamic resistance. Hydrodynamic resistance is an important factor that affects the setting of traps at the fishing ground because if the speed of the current is high, then the traps will not settle down on the seabed but will move around (Johnny et al. 2004). The objective of this study is to investigate the effect of the shape and solidity ratio of traps on the hydrodynamic resistance of traps.

Box and cylinder traps were used in this experiment, and they were made of an iron frame (5 mm diameter); their dimensions were L 0.40 × W 0.40 × H 0.22 m and D 0.40 × H 0.22 m, respectively. Five different traps for each design were covered with wooden rods (8 mm), The distance between each rod varied between 4－45 mm. Also, five different traps covered with net (polyamide) were made for each design; the lengths of the twine (*d/l*) of the nets ranging from 0.017 to 0.138. The flow speeds used to measure the hydrodynamic resistance force of the traps in the flume tank were 0.1, 0.2, 0.3, 0.4, and 0.5m/s.

The values of the hydrodynamic drag force at the assigned solidity ratio: For the box and cylinder-shaped traps, the hydrodynamic drag force decreased with the solidity ratio, but increased with the flow speed. For the traps covered with tree rods, the drag force for the box and cylinder-shaped traps were 3.75, 3.15, 3.22, 2.17, and 1.08 N and 2.78, 2.66, 2.49, 1.71, and 1.13 N, respectively, with increasing solidity ratios. Also, for the traps covered net, the drag forces for the box and cylinder-shaped traps were 2.41, 2.20, 1.18, 0.71, and 0.21 N and 1.78, 1.68, 1.16, 0.71, and 0.23 N, respectively, with increasing solidity ratios.

For the box and cylinder-shaped traps, the C_D showed a parabolic pattern with increasing solidity ratio. For the traps covered with rods, the C_D of the box and cylinder-shaped were 0.92, 1.05, 1.46, 1.11, and 0.62 and 0.62, 0.70, 0.83, 0.64, and 0.58, respectively, with increasing solidity ratios. For the traps covered net of traps, the C_D of box and cylinder-shaped traps were 1.35, 1.91, 1.59, 1.29, and 1.11 and 0.83, 1.37, 1.40, 0.91, and 0.18, respectively, with increasing solidity ratios.

From our observations, we conclude that the shape and the solidity ratio of the traps affect the hydrodynamic resistance of traps.

PP-216

The main factor and counterplan of marine casualties of fishing vessel according to the type of fishing job in Korea

Byung-Soo PARK, Il-Kwon Kang[1*], Sang-Jun HAM[2], Chi-Wan PARK[2]
Dep. of Maritime Police & Production system, Gyeongsang National University,
[1]Division of Marine Production System management, Pukong National University,
[2]Dep. of Fisheries Physics, Graduate School, Pukyong National University

Marine casualties of fishing vessel from 2001 to 2010 in Korea were analyzed. However there is a narrow difference annually, marine casualties originated from fishing vessels occupied 70 percent or more of the whole marine casualties in Korea, therefore a judicious measures to decrease of casualty in fishing vessel is indispensable for reduction of the nationwide casualties. Most casualties of fishing vessel were resulted from the human factors such as poor watch keeping, negligent action for engine, and the trend of it showed that machinery damage hold first place and collision took second as on the kind of casualties, and on the other point of cause, operating error took first and poor handling or inspection of machinery held second place ranked. Because these two casualties took the greater part of casualties, those are very serious problems for security of fishing vessels, so we ought to try to reduce these two factors as a matter of the highest priority. Author paid attention to the operating types of fishing vessel, since the cause of casualties may different from the operating types, and the countermeasure to the casualties may different each other in these fishing vessels. After selecting 12 operating types of fishing vessels occurred many casualties on an average during 10 years, and investigation about these 12 operating types was studied.

This study used the statistics and yearbooks of marine accident from korean maritime safety tribunal and korea overseas fisheries association, etc. With these data, the trend of casualties occurred by fishing vessels during 10 years, and the cause and countermeasure of the casualties according to the operating type of fishing vessels investigated.

On the casualties according to the operating types of fishing vessel, jig boat hold first place, trap fishing boat second, and next mixed fishing boat ranked, but on the view of the occurring ratio of it, drag boat hold first place, trawler second, long liner third ranked. As a countermeasure for reduction of it, it is necessary for navigation operators to have taken more education and training intended to reduce them systematically and continuously.

PP-217

Efficiency of wave absorption on the motion of characteristic for Tawoo Jeju

Chan-MoonChoi, Jang-YoungAhn,Chang-HunLee, Byeong-Yeob Kim, Hyun-Hak Park
Department of Marine Industry and maritime police, jeju National University

Regarding the structure of Jeju Tawoo, the diameter of the front of log is narrow and that of the back of log has the shape of a longitudinal and the stern is 30-40cm longer than the bow, which has taken account of bow wave. If the stern and bow of a boat have the same length, the boat has the wider area that contact with the wave and the resistance to bow wave increases, which serves as an obstacle to sailing whereas Tawoo with narrow bow has less resistance to the bow wave and thus the safety and comfort during fishing activity increase. To investigate the optimal traverse gap for absorbing wave motion characteristics and the motion characteristics of Tawoo, the reflection coefficient according to the period of porous rate and wave length(a_p/λ), transmission coefficient, energy dissipation coefficient was analyzed conducting a hydraulic model second tank experiment. The results indicated when the wave passes by, the wave pressure increases and thereby the wave packet decreases in the gap of the model, which incurs an eddy; the eddy is absorbed through the gap, resulting in energy dissipation. The reflection coefficient and energy dissipation coefficient have same tendency. They increase as the wave length decreases and as they get near to high frequency area whereas the transmission coefficient increase as the wave length increases and it gets near low-frequency areas. With regard to reflection coefficient, the distribution range of measured data becomes narrow and the mean decreases as the porous rate increases and the distribution range and mean of data decreases particularly at p(porous rate)=0.2518. In the case of transmission coefficient, the distribution range of the data measured around the mean increases and the mean gradually increase as the porous coefficient increases, which is contrary to reflection coefficient. In particular, the data range is the narrowest in the correlation equation at p(porous rate) = 0.2518, yet the mean value is the lowest at p(porous rate) whereas the energy dissipation coefficient linearly increases as the porous rate increases towards the center at p(porous rate) = 0.2518 and then decreases again from the center, indicating wave is absorbed stably as energy dissipation coefficient increases, which leads to better navigability. An increase of energy dissipation coefficient means more wave is absorbed by the porosity of model when waves pass by the experimental model. Thus the results of this experiment to find the best porous rate of 8 experimental models of Tawoo motion characteristics indicated the highest energy dissipation coefficient can be obtained at 0.25 (p(porous rate) = 0.2518). The results of experiment proved the porous rate varies depending on the wave length of incident wave, yet short-wave results in higher energy dissipation coefficient than long-wave and the period and porous rate are in a reverse correlation. The results of Tawoo model experiment suggested the excellent motion characteristics of Tawoo based on the thoughts in marine engineering make Tawoo as an excellent marine transportation means. However these results have been derived from a model tank experiment. Thus to extract more reliable results, it is essential to conduct sea trials on the basis of these results.

PP-218

Changes of nutritional composition due to the mixture of natural light on single light emitting diode (LED) light sources

Jae-Hyun Bae[1],Heui-Chun An[1], O-Nam Kwon[2], Jin-Chul Park[3]and Heum-Gi Park[3*]

[1]Aquaculture Industry Division, East Sea Fisheries Research Institute, National Fisheries Research & Development Institute

[2]Marine Biology Center for Research and Education, Gangneung-Wonju National University

[3]Department of Marine Bioscience, Gangneung-Wonju National University,

The purpose of this study was to confirm changes of nutritional composition of microalgae (diatoms) attached on underwater transparent plate on the different LED light sources (red, blue, white and red blue mix.) based on an irradiation of natural Light. And all experiment carried out a culture in flowing system (5L/min.) used 200 L tanks.

Naviculacancellate was dominant species in two treatment as single LED and mixture of natural light. Also diatoms as *Niztschia* sp. *Thalassionema* sp. and *Fragilaria* sp. appeared. Biomass of diatom was high in all control on two treatments. In LED single irradiation, total lipid (TL) was higher to 112.9 mg/g in control than that of others. And saturated fatty acid (SFA) and mono-unsaturated fatty acid (MFA) as C14:0 and C18:0 was higher in control than that of others trials. But high unsaturated fatty acid (HUFA) as C18:2n6 and C20:5n3 was higher in red-blue LED trial. Also total lipid and fatty acid contents of red LED trial were lower. Total protein (TP) and essential amino acid contents (EAA) were higher to 54.7 and 3.2ug/mg in control, respectively. In amino acid contents, control was higher others contents excluded glycine and histidine than that of others. And in LED treatment mixed with natural light, TL was higher to 113.6 mg/g in red-blue LED trial. SFA and MFA were higher in control, but contents of HUFA as C18:2n6 and C20:5n3 was higher in red-blue LED trial. TP and EAA were higher to 11.0 and 3.4 ug/mg in white LED (blue-yellow). According to the high contents in white, blue and red-blue LED trial, Amino acid contents showed increase due to mix and single of blue LED.Therefore,difference of biomass could not compare with among trials due to different intensities of radiation. If we could mix yellow, red LED and natural light based on blue LED to increase of lipid and protein contents in diatoms, we suggested that the mixing LED is very benefit tools for rearing of early abalone and sea cucumber in aquaculture.

PP-219

The effect of the different LED light sources attached at the IMTA facility to the species composition and biomass of microalgae

Heui-Chun An[1], Jae-Hyun Bae[1], O-Nam Kwon[2], Jin-Chul Park[3]and Heum-Gi Park[3*]

[1]Aquaculture Industry Division, East Sea Fisheries Research Institute, National Fisheries Research & Development Institute

[2]Marine Biology Center for Research and Education, Gangneung-Wonju National University

[3]Department of Marine Bioscience, Gangneung-Wonju National University

The study was conducted to examine the effects of different light on the formation and standing crop of the microalgae. The LED light of three different wavelength (Blue, Red, and White) and the natural light was used for comparison.

There was no difference on the formation and standing crop of the microalgae between the surface and bottom area under the LED and natural light when examined the water sample. However, the rate of the standing crop of the microalgae was higher under LED light than the natural light when examined the attachment substrate.

Besides, the three colors of LED light had each different dominant species. It resulted as the microalgae had species-specific preference for light wave advantageous for accumulating their pigment.

The blue LED light had the most standing crop of the microalgae of the three.

The installation of the LED light, especially blue, on IMTA facility is recommended to promote the growth of adhesive microalgae.

PP-220

Development of Live Fish Container for Long Distance Transportation

Yong-Su Yang[1*], Bo-Nam Kwon[1], Kyounghoon Lee[1], Seonghun Kim[1], Jaehyun Bae[2]
[1]Fisheries System Engineering Division, NFRDI
[2]Aquaculture Industry Division, East Sea Fisheries Research Institute, NFRDI

Traditionally, fishing vessels and airplanes have been frequently used for long and short distance transport or export of fish. Fish holds in fishing vessels are used to transport fish domestically or from Korea to neighboring countries such as Japan, while airplanes are used for long distance export to countries such as the United States and Taiwan. Fish exportation using airplanes incurs sizable logistics costs (12,000 KRW/kg), accounting for more than 45% out of the total export cost. Thus, it is unreasonable to quantitatively expand fish exportation by means of air transport. In addition, cases of failing to deliver fish at the right time to the right place occurs frequently due to the limited cargo capacity and insufficient cargo space of airplanes, especially during the peak season. Therefore, a technology that not only minimizes the logistics cost but also transports fish freshly and safely, in the case of long distance exportation to countries such as the United States and Taiwan, should be developed.

This study aims to develop technology that can minimize the logistics cost and facilitate long distance transport in a fresh and safe manner by using a live fish container. Live flatfish were selected as the target fish for long distance transport and a live fish container and transport environment monitoring system were developed to identify the optimal conditions for the transport environment by observing the change in the environment and live flatfish condition during the transport process.

In the transport environment condition (water temperature: 7°C and dissolved oxygen: 15ppm), which was established based on the result of an experiment, the survival rate was found to be approximately 99% when live flatfish were transported to the United States. In addition, a comparison of the established conditions for the transport environment and data detected from sensors (water temperature and dissolved oxygen) installed in the live fish container confirmed that stable water temperature and dissolved oxygen were maintained by controlling oxygen generators and coolers. Based on the study result that most flatfish survived under the established transport environment condition, it is anticipated that the development of live fish containers for various fish will reduce logistics costs and facilitate fish exportation not only to the United States but also to other countries in Europe and the Middle East.

PP-221

Acoustic characteristics of Jellyfish Using a multi-frequency difference method

Kyounghoon LEE[1*], Won-Duk YOON[2], Chang-Hoon HAN[2], Seonghun Kim[1], Seong-Wook PARK[1]

[1]Fisheries System Engineering Division, National Fisheries Research & Development Institute

[2]Fishery and Ocean Information Division, National Fisheries Research & Development Institute

The jellyfish has recently become one of major issues in the Northeast Asia region due to their fatal damage to fishing industry and power plants near to coastal areas. Therefore it becomes important to quantify the jellyfish's density variation in the survey area in order to prevent jellyfish's blooming from various damages in the summer season. A moon jellyfish, which is estimated to be developing in inshore sea, gives a fatal damage to Korean and Japanese coastal fisheries and the power plants. It needs to estimate its abundance in the survey when it blooms to prevent from a fatal damage. By the acoustic method, It can be extracted echo signals from the echogram using an echo counting method and be also verified its echo signals mixed by other scatterers using a 2 frequency difference method. A moon jellyfish, which is developed in the coastal area, is relatively small size other than A *Nomurai* Jellyfish and has intensive patchiness, so an echo integration method would be more useful and effective than an echo counting method. To extract their echo signals, the 2 frequency characteristics was collected and analyzed by 38 and 120kHz on the basis of sizing estimates using an acoustic camera, and it was also estimated the density in south-western coastal area of Korea. Results can be utilized to forecast and reduce the damages caused by jellyfishes and it can be also effectively used to estimate jellyfish's abundance in coastal areas using the scientific echo sounder.

Keywords: Acoustic characteristics, *Nomurai* jellyfish, Moon jellyfish, Multi-frequency difference method, scientific echo sounder

PP-222

The fishing characteristic of Korean tuna purse seine fishery in the Western and Central Pacific Ocean

Mi Kyung Lee[1], Sung Il Lee[1*], Zang Geun Kim[1], Jeong Eun Ku[1], Sang Chul Yoon[1], and Dong-Woo Lee[1]

[1]National Fisheries Research and Development Institute (NFRDI), Busan, Korea

Korean tuna purse seine fishery in the Western and Central Pacific Ocean (WCPO) commenced in 1980, its catch increased thereafter and had a level of over 2 hundred thousand mt in 1991, and then it showed a fluctuation with about 2 hundred thousand. In this study, the fishing characteristics of Korean tuna purse seine fishery in the Western and Central Pacific Ocean were investigated using the logbook data compiled from captain onboard and the statistical data from 1980 to 2012. We analyzed catch trend, species composition and operating rate by set type used in Korean tuna purse seine fishery in the WCPO during 1998-2012. The set type recorded in logbook was categorized as 'Unassociated school', 'Log-associated school' and 'FAD (Fish Aggregating Device)-associated school'. The fishing distribution of catch and effort combined by 5-year and 5°×5° block from 1980 to 2012. And the fishing distribution by set type in recent five years was analyzed as well. From a result, Korean tuna purse seine fishery has operated depending on mainly ‘Unassociated school in the WCPO, and showed that the portion of FAD operating had somewhat of increasing in recent years. As this is a fundamental research on Korean tuna purse seine fishery operated in the WCPO, it is expected to be used as a basic data for establishing management plans of FADs for Korean tuna purse seine fishery.

PP-223

CPUE standardization for bigeye tuna caught by Korean tuna longline fisheries in the Indian Ocean (1977-2012)

Sung Il Lee[1*], Zang Geun Kim[1], Mi Kyung Lee[1], Dong-Woo Lee[1], Hee Won Park[1], and Tom Nishida[2]

[1]National Fisheries Research and Development Institute (NFRDI), Busan, Korea

[2]National Research Institute of Far Seas Fisheries (NRIFSF), Shizuoka, Japan

Bigeye tuna in the Indian Ocean has been one of the highest catch in Korean tuna longline fisheries along with yellowfin tuna. Bigeye tuna catch considerably increased from the mid-1960s and peaked at about 34 thousands mt in 1978, and then has decreased with a fluctuation. Since 2000 it is showing a level of about 1 thousand in average. In this study, bigeye tuna CPUE (catch per unit effort) standardization of Korean longline fisheries in the Indian Ocean was conducted by Generalized Linear Model (GLM) using operational data and aggregated data (1977-2012) to assess the proxy of the abundance index. The data used for GLM were catch (in number), effort (number of hooks) and number of hooks between floats (HBF) by year, month and area. In addition, we explored the core area where Korean tuna longline vessels have been fishing for bigeye tuna. Bigeye tuna CPUE was standardized for the whole area using operational data and aggregated data and for the core area. From ANOVA (type 3) results for the GLMs, they suggests that area effect is the largest factor affecting the nominal CPUE in the whole area model with area effect, and year effect is the largest factor in the core area model without area effect. All the standardized CPUEs had decreased until the early of 2000s except a jump in the mid-1990s, and then showed a steady trend with a level of 2-3 in recent years.

PP-224

Comparison of productivity between the local fishing vessels operating in the north and south water of Jeju Island

Chang-Heon Lee, Jang-Young Ahn, Chan-Moon Choi, Byeong-Yeob Kim
Department of Marine Industry and maritime police, jeju National University

As of 2012, the number of small fishing vessels, weighing less than 20 ton in the waters of Jeju Island, is considered 2,740 and it has covered approximately 95% of the registered fishing vessels in total. In the light of that, it is reasonable to assume that profits of the fishing vessel fishery of Jeju Island are basically determined by the catch of those small fishing vessels. That is also one of the other reasons for Jeju Island to pay much greater attention to the productivity of the small fishing vessels when it comes to dealing with the policy for the fishing vessel fishery. However, even so, there has been no objective research about the basic productivity of the small fishing vessels so far. That is what makes it much difficult for the Jeju government not only to make the policy with fishery but also to figure out fisheries damages by all sorts of constructions.

In order to propose basic references for the policy making of small fishing vessel fishery by the Jeju government, this study analyzed fishing records of 17 sample fishing vessels and investigated the basic productivity of each of those vessels. Those 17 fishing vessels were registered in port Aewol in the north of Jeju Island.

In addition, this productivity was compared with that of each of 7 sample fishing vessels in port Kangjung in the south of Jeju Island. The findings are presented in Fig. 1.

Relationship between the average daily catch (y) and the tonnage (x) of fishing vessels in port Aewol was described by the following equation.

$y = 6.1403 \ln(x) + 21.456.$

While, in port Kangjung,

$y = 23.271 \ln(x) + 25.715.$

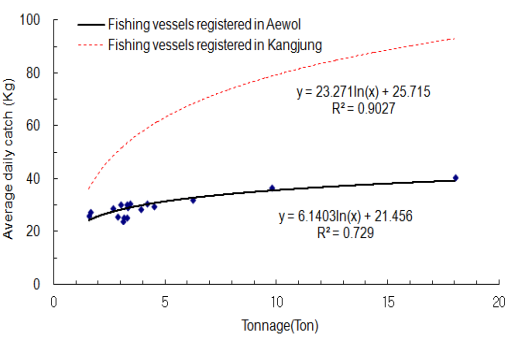

Fig. 1 Comparison of productivity between the fishing vessels registered in the Aewol and Kangjung of Jeju Island.

Due to survey periods, survey methods and survey areas and so on, the difference in abundance of fisheries might appear. The productivity of the fishing vessels in port Kangjung in the south of Jeju Island was greater than that of fishing vessels in port Aewol in the north of jeju island

PP-225

Physicochemical characteristics of baits for swimming carb *Portunus trituberculatus* pots

Ho Young CHANG[1*] and Jae Geun KOO[2]

[1]Department of Marine Science and Production, Kunsan National University,

[2]Department of Food Science and Biotechnology, Kunsan National University

In this study, a composition giving influence on attraction effect has been analyzed in order to develop artificial bait for swimming crab *Portunustrituberculatus*spots. And for the analysis, mackerel (most commonly used as natural bait) and tuna's by-product (a possible candidate which may replace artificial bait for swimming crab pots according to other research) were selected for investigating physiochemical characteristic by fraction of active attractant from the two objects.

Mackerel generally used for natural bait for swimming crab pots consists of protein, fat, ash and carbohydrate, according to its content order. And especially, content of fat accounts for large portion (31.6%) of mackerel. The value of acid value (13.9meq/kg) and POV (344.5meq/kg), indicating a degree of acidification of fat, shows that the acidification had proceeded to the certain degree, while VBN's value showed 47.5mg%. According to these values, mackerel was appropriate to be used as the bait.Nucleic acid related compounds (ATP, ADP and AMP) were not detected as they were all decomposed, and IMP (115.1mg%), HxR (67.7mg%) and Hx (53.3mg%) were detected respectively. Fatty acid of mackerel consists of saturated fatty acid (23.2%), monoenic unsaturated fatty acid (36.3%) and polyenoic unsaturated fatty acid (34.2%). The proportion shows that unsaturated fatty acid accounts for more than 2/3 of total fatty acid of mackerel. When it comes to free amino acid, HIS and TAU were high (587.3mg% and 216.1mg% respectively), followed by PHE, CYS, LYS, ARG and ALA.

Tuna viscera's general composition showed higher protein, lower fat and slightly higher ash, as it consists of protein (73.1%), fat (20.2%) and ash (6.7%). Nucleic acid related compounds, including ATP, ADP and AMP, were not detected as the compounds were all decomposed, while IMP (73.2mg%), HxR (28.1mg%), Hx (168.7mg%) were detected. It is judged that most ATP, ADP and AMP in tuna viscera are decomposed during the process of defrosting, as frozen tuna is carried in can factory for the process. But, it is also judged that the tuna viscera's freshness is relatively good, considering IMP's content (73.2mg%). Free amino acid in tuna viscera consists of GLU, LEU, ASP. ARG and ALA. Unlike mackerel, the tuna viscera shows low HIS content. Although tuna is a species similar with mackerel, composition of free amino acid between two was quite different. Saturated fatty acid 16:0 and polyunsaturated fatty acid 22:6 account for more than 50% of fat acid of tuna viscera. Therefore, it was found that tuna viscera has lower saturated fatty acid and fat content in comparison with mackerel, as the tuna viscera has lower value in saturated fatty acid (48.4%), monoenic fatty acid (24.0%), polyenoic fatty acid (27.6%).

PP-226

The tendency of marine accidents occurring in the sea around jeju island and provincial policy directions to prevent the marine accidents

Ju-Hee CHO, Jang-Young AHN, Chan-Moon CHOI, Chang-Heon LEE, Byung-Yeob KIM
Jeju National University
Department of Marine Industry and Maritime Police, Jeju National University

Introduction

As a lot of fishing vessels are operating in coastal and near sea around Jeju Island owing to the more abundant resources than any other area, many marine accidents of the fishing vessels occur in this sea area around Jeju Island. Therefore, in order to prevent the recurrence of the marine accidents, it is needed to change the policy of the government level or Jeju Special Self-Governing Province.

Materials and Methods

Using the statistical data of Jeju Coast Guard from 1983 to 2012, the trend of marine accidents was classified and analyzed by the ports of registry, fishing methods, occurrence factors and human participation, respectively.

Result and Discussion

Marine accidents of about 600~1,000 vessels was reported in all the waters around South Korea from 2000 to 2008. Since 2009, these accidents increased rapidly and reached 1,600~2,000 vessels. This increase in the number seems to be due to the change in statistical processing method of the Coast Guard. Although marine accidents of longline fishing vessels did not show a big difference prior to 1993, the number have increased steadily until 2007. This is considered the tendency that appears when longline vessels, using the Port of Sungsanpo as a base and operating in fishing grounds in the East China Sea, are converted from short-term fishing to long-term fishing for reasons such as cost reduction and the performance improvement of the fishing vessels. The number of vessels in marine accidents decreased gradually from 1999 to 2002 and for nearly 7 years from 2002 to 2008, the annual average of marine accidents stayed at 97 vessels(Fig. 1). This is seemed to be the result of the change in the policy of either the central or local government or in the way of statistical processing. That is, because of policies focused on the marine accident prevention by the ministry of maritime affairs and fisheries, it is assumed that the number of the marine accidents due to careless navigation which can be viewed as a human error is less than that due to poor maintenance as a cause of mechanical failure in the same period. Therefore, the fishing vessel safety inspection team by Jeju special self-governing province since 2005 must be adjusted in terms of efficiency comparing to the measures of the ministry of maritime affairs and fisheries, which has become effective since 2000. In addition, it is needed to make the policy against perennial marine accidents annually around jeju island.

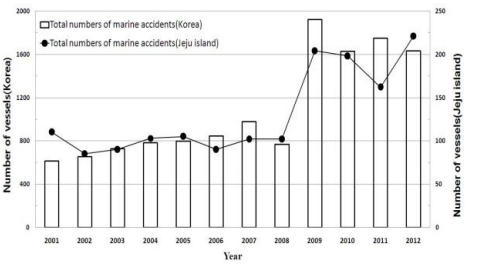

Fig. 1 Comparison of marine accidents of jeju and korea.

PP-227

The Stability of side trawler operating in East sea in Korea

Hyo-Jae Jo, Il-Kwon Kang[1*], Sang-Jun HAM[2], Chi-Wan PARK[2]
Division of Ocean System Engineering, Korea Maritime University,
[1]Division of Marine Production System management, Pukong National University,
[2]Dep. of Fisheries Physics, Graduate School, Pukyong National University

The purpose of this paper is to examine the stability of the side trawler operating in East sea in Korea. There are two types of trawler according to the method of shooting or hauling net, one is side trawler, another stern trawler. Side trawler had already operated in the past days, but no longer operating across the world for the reason that the operating method of the side trawler was not efficient as compared with the stern trawler. When shooting net by side trawler, the net and otter board go down to the stern, it may cause the damage to the screw propeller and the rudder. To avoid this situation, they have to use the rudder to the direction of the net come out. And another danger thing is faced at hauling net, since the ship has little propulsive force to forward or almost stop through the water in this time, the ship come to receive wind in transverse direction and then the heeling moment increase, and hauling load add in addition, the heeling moment increase over and over. So the stability of the ship very reduced. In rough sea, this added mass affected to transverse direction may result in capsize. It is very precaution to side trawler. In this paper, some calculation to stability of side trawler and stern trawler in hauling net, the result of stabilities were compared.

Some calculation of static and dynamical stability for side trawler carried out and compared with the criteria of IMO Res. A749 in the characteristics of GZ for the model ship due to the loading conditions, as the range of stability, actual range of stability, maximum GZ value, heel angle occupied maximum GZ, stability vanished ranger, etc. And the angle of transverse heeling angle of the side trawler at hauling net calculated and compared with the angle of the stern trawler in hulling net to the stern.

The initial stability of side trawler operating in East sea in Korea satisfied with the regulation of the stability of fishing vessel in Korea, but for the range when the angle heel over the initial situation, it not satisfied with the regulation of the IMO rule. This results show that dynamical stability of side trawler is very poor, and the range of stability very narrow and angle of the beam end occurred at very low angle. And the heel angle of the side trawler is 3.3 times or 5.5 times more in compared with stern trawler in stern heel at hauling situation.

PP-228

Behavior analysis of rockfish *(Sebastes inermis*) corresponding to the wavelength of LED light

Gyeom Heo[1], Hyeon-Ok Shin[2], Min-A Heo[1]

[1]Department of Fisheries Physics, [2]Division of Marine Production System Management, Pukyong National University

LED light with red, blue, green, white wavelengths has been developed to be used effectively in various fields since the LED light had been developed in the 1960's. Also, Because of energy efficiency, LED light is being used in several areas including electronic industry. In fishery, researches of LED light have been carried out for fishery. For example, It is gathering lamp of fishing boat. On the other hand, since the fishery resources is reduced and production volume is decreased, efforts for the protection of fishery resources have continued globally, and the interest in cultivation of marine products is increasing. In Korea fish farming, main fish species is flatfish (*Paralichthys olivaceus*) and rockfish (*Sebastes inermis)*. Therefore, experiments fish was a rockfish *(Sebastes inermis*). In order to use the LED technology to enhance the growth rate of fish, the experiment for the analysis of fish behavior according to LED light wavelength was conducted. Experiments in the same conditions tank 4(given the change in wavelength of the three LED light tank, one control tank).

Channel 1: R110, 622nm, 811mW

Channel 2: G138, 518nm, 810mW

Channel 3: Control

Channel 4: G110, 518nm, 648mW

Each tank installed CCTV camera with infrared function ware taken 24 hours. Fish behavior taken by CCTV camera was calculated by behavioral tracking software during 5 minutes / 1 hour. In the tank with different LED light wavelength, the behavior of fish on the right before and right after in sunrise/sunset, channel on/off, feeding time and 25hours was analyzed. As a result, first of all, compared right before and right after feeding time and feeding time, in the channel 4, The rate of movement distance of fish in feeding time to right before and right after was longest than the other channels. And compared right before and right after channel in channel on, in the all of the tank, movement distance of fish in right after in channel on was longer than movement distance in right before in channel off. On the other hand, movement distance of fish in the channel 1 was longest in the 25 hours analysis. Through this research, we have analyzed the change in the behavior of fish a day. For the growth of fish, we could also see changes in the behavior of fish on the feeding time. It is important to study specifically in behavior of fish under the influence of LED light.

PP-229

Electroretinographic Analysis of Dark-adapted Goldfish in White LED Light

Min-Ah Heo[1*], Hyeon-Ok Shin[2], Eun-ji Lee[2], and Mi-Jin Lee[2]
[1]Department of Fisheries Physics, Pukyong National University
[2]Department of Marine Production System Management, Pukyong National University

This study was conducted to investigate visual spectral sensitivity of scotopic goldfish in the LED light. We therefore recorded electroretinogram(ERG) to investigate visual function in the dark-adapted eyes of goldfish. We used white LED lamps only for the initial test and, five goldfish were used in the experiment. The fishes were acclimatized in the dark for 1 hours before we started recording ERG. The light intensity were divided into 8 stages and automatically controlled by use of programmable logic controller. Increment threshold functions were derived from the a- and b-wave ERG components. The a-wave component was measured from the baseline response to the first negative peak; the b-wave component was measured from baseline or the first negative peak to the first positive peak

According to the result,

1. The amplitude change of the ERG is highest at the moment when the white LED light is irradiated and becomes weakest soon after, then gradually increases and becomes stable.
2. The amplitude change of the ERG is decreased as light intensity is decreased.
3. The ERG response under the low light level is rather slow compared to the ERG response under the higher light level.
4. Also, there is very little indication of a voltage-negative response(a-wave) in the ERG response under the low light level, while there is a small, but apparent a-wave component to the response under the higher light level.
5. The increment threshold functions of the goldfish is 0.01 lx.

PP-230

Hydro-acoustic and visual census survey of demersal fish aggregations in Ulju small scale marine ranching area (MRA), Korea

Bo-kyu Hwang[1*], JiHoon Lee[2], Jeong-kyu Oh[3]

[1]Department of Marine Science & Production, Kunsan National University

[2]Division of Marine Technology, Chonnam National University

[3]Korea ecology institute Inc.

Hydro-acoustic survey was conducted to estimate demersal fish distribution and density in Ulju small scale marine ranching area (MRA), Korea in September and November 2013. Two different-type acoustic systems, scientific echo sounder (EK-60, 120kHz) and imaging sonar (Blueview P900-45) were combined tocollect fish echo signals while monitoring underwater conditions.Underwater visual census survey was also conducted to investigate a fish species composition andtheoretical model estimation technique was applied to investigate acoustic scattering characteristics of dominant fish species.The results of the visual census survey showed that a total of 20 fish species was occurred in September and a total of 29 fish species was occurred in November. Except Juvenile fishes, the Multicolorfin rainbowfishwas estimated to be a dominant fish species in the MRA and theoretical modeling result with set-net samples showed that its TS_{cm} value for 120kHz was estimated as–71.3dB.Acoustic survey results indicated that demersal fish were distributed around a shellfish farm near shore and artificial reef positions at offshore side on September. They, however, mostly detected around a shellfish farm near shore on November. Mean density of the demersal fish was consequently estimated as 0.757g/m^2 (CV=13.1%) on September, 0.219g/m^2 (CV=47.7%) on November.Sometimes, the echoes from submerged objects are easily confusable with fish echoes in 2D echogram and generate an error in fish abundance estimation. Imaging sonar which was combined with scientific echo sounder, however,clearly displayed the shape of fish aggregations, fishing ropes, and underwater structures as well as sea bottom shapes. So itcould provide valuable information to eliminate the echo signals which is difficult to distinguish from fish echoes by their shapes during echogram analysis.

PP-231

Capture efficiency of dredge in the coastal waters of Gangneung

Heui-Chun An, Jae-Hyun Bae, Jong-Myung Park, Byoung-Sun Yoon, Sung-Eic Hong[1],
East Sea Fisheries Research Institute, National Fisheries Research &Development Institute
[1]Bada Ecology Research

The dredge fishing is a fishing method of capturing targeted shellfishes living in the sand or mud by scraping the bottom using a bag net with a frame on it. The selectivity of dredge is related with tooth space and mesh size of bag net.The Venus clam, Surf clam, Sakhalin surf clam and Tellin are commonly caught in the Eastern coast of Korea.This research carried out in the coastal waters of Gangneung focuses on the reduction of bycatch in the dredge fishing and analyzes the fishing efficiencyof a dredge according to the tooth space and mesh size.A total of eight different types of mesh fishing tickle including the four different tooth space (25 mm, 30 mm, 35mm, 40mm) and four different mesh size (15mm, 35mm, 50mm, 60 mm)were used in the test. The 27 mm sized mesh was used for the tooth space experiment and the 25 mm spaced tooth for the mesh size experiment. The test fishing was carried out at Yeongjin-ri, Yeongok-myeon,Gangneung-sifrom July 2013 to December 2013 under the condition of two frames on an experiment ship, 200m of towing distance and 60 to 90 minutes for each towing to minimize damages to shells.

The species composition of the test by weight (wet weight) was 83.2% of Mollusca, 10.2% of Echinodermata, 0.3% of Arthropoda and 77.9% of them were marketable species. The Megangulusvenulosus (38.7%),Sybillae (30.9%) and Stimson's quahog were the dominant marketable species.The catch of marketable species was measured by the number of caught fishes and their weight. The catch was measured to analyze the frequency distribution and fishing efficiency.

PP-232

Comparison Study on Characteristics of Oyster Shells Cultured in Various Waters in Korea.

Sang-Man Cho[1], Sueng Woo Lee[2]

[1]Department of Aquaculture and Aquatic Sciences, KunsanNational University

[2]CO2 Sequestration Research Department, Korea Institute of Geoscience and Mineral Resources

Shell of oyster has a function of shelter from predator as well as growth potential. Shell is comprised of complex matrix from endogenic biotic and exogenous abiotic factors.Therefore, oyster shell might have chronicle records of oyster and environmental information of cultural waters. We investigated the physicochemical characteristics of oyster shells from three difference oyster farms. The shells from Wando waters characterized high stability of nanostructure, ticker nacreous layer, high thermal decomposition temperature and low content of sulphur as well. These results represent that Wando coast is pristine water for oyster farming and furthermore physiochemical characteristics of oyster shells can be a useful indicator of environmental monitoring in cultural waters.

PP-233

Comparative studies on the number of *Perkinsus olseni* cells released from dead and live Manila clams (*Ruditapes philippinarum*)

Ki-Woong Nam, Kyung-Il Park
Department of Aquatic Life Medicine, Kunsan National University

This study investigated the number of *Perkinsus olseni* cells released into the ocean upon the death of Manila clams. In August 2012, *P. olseni* infection rates in healthy clams and gaping clams were measured Wido, Jeollabuk-do Province, Korea where a mass death of clams had occurred. The healthy clams (n = 20) showed, on an average, 3,069,298 cells/gram tissue wet weight (GTWW), whereas the gaping clams (n = 20) showed only 68,021 cells/GTWW. In order to investigate the cause of this phenomenon, clams collected from Gomso Bay were divided into two groups; in one group, the number of *P. olseni* cells was measured immediately after collection, and in the other group, the clams were killed by cutting the adductor muscle and were then kept immersed in sea water for three days before the number of *P. olseni* cells was measured. The *P. olseni* infection rate in the former group was 3,517,870 cells/GTWW, while that in the latter group was only 22,458 cells/GTWW. These results indicate that when the tissues of dead clams begin to break down, the trophozoites of *P. olseni* die. To confirm this, *P. olseni* trophozoites, cultured *in vitro*, were injected into the heart of the clams; these clams were then either killed or allowed to survive. After three days, when the number of *P. olseni* cells was measured, 968,125 trophozoites were found in the dead clams, whereas 17,974,219 trophozoites were found in the clams that were allowed to survive. Therefore, the results of this study indicate that the number of *P. olseni* trophozoites released by live clams into their surroundings is greater than that released by dead clams. The study findings also indicate that most of the trophozoites and zoospores die during the tissue break down that occurs following the death of the host organism. It is believed that our study will be useful to understand the transmission mechanism of *P. olseni* in the Manila clams.

PP-234

A comparison of Habitat characteristics of Surface sediments between on the Cultured Manila clam, *Ruditapes philippinarum*and Mud shrimp, *Upogebia major*at the Tidal flat in the West coast of Korea

Yoon seokChoi, Jae hee Song, Kwang jae Park,Sang ok Chung, Sang pil Yoon and Kyoungho An
National Fisheries Research & Development Institute Tidal Flat Research Institute,
Gunsan 573-882, Republic of Korea

We investigated the habitat characteristics of surface sediments on the cultured manila clams at Jukyo of Boryongand Hajon of Gochang tidal flat in Korea. In order to compare the habitat characteristics we measured the physiochemical parameters(temperature, salanity, dissolved oxygen, nutrients, chemical oxygen demand andChlorophyll *a*) of seawater and the pore water extracted by peeper on surface sediments in the surveying areas. And the geochemical characteristics(mean grain size of sediments (Mz), chemical oxygen demand (COD), ignition loss (IL), TOC, C/S and TN) on the burrow wall of the mud shrimp *Upogebia major* were determined and compared with those in surrounding non-borrow sediments and surface sediments of tidal-flat. The levels of TOC and TN in the depth profile of sediments on the burrow wall were higher than those in non-burrow sediments. But there was no significant difference in chlorophyll *a* content between habitat of manila clam and mud shrimp. The C/S ratio for the between two areas showed that survey areas had anoxic or sub-anoxic bottom conditions, respectively.We think that mud shrimp thus perform as geochemical ecosystem engineers and those burrow functions as a trap for organic matter.

References

1. Kinoshita et al., Mud shrimp burrows as dynamics traps and processor of tidal-flat materials, *J. Marine Ecology Progress Series*, Vol.**247**, pp.159-164, 2003.
2. Anthony et al., Geochemical engineering by the mud shrimp *Upogebia pugettensis*(Crustacea: Thalassinidae) in Yaquina Bay, Oregon: Density-dependent effects on
organic matter remineralization and nutrient cycling, *J. Limnol.Ocenography,* Vol.**54**(6), pp. 1911-1932.

PP-235

Transcriptional responses in gills of Manila clam (*Ruditapes philipphinarum*) exposed to copper (Cu) and cadmium (Cd) using oligo microarray

°Dananjaya S.H.S[1], Jin-young Choi[1], G.L. Godahewa[2], Jehee Lee[2] and Mahanama De Zoysa[1*]
[1*]College of Veterinary Medicine, Chungnam National University, Yuseong-Gu, Daejeon, 305-764
[2]Department of Marine Life Sciences, Jeju National University, Jeju Special Self-Governing Province, 690-756

Copper (Cu) and Cadmium (Cd) are considered as hazardous pollutants in aquatic ecosystems. Bivalves are known to accumulate high concentrations of heavy metals in their tissues and therefore Manila clam is often been used as a sentinel model organism for toxicological studies and monitoring marine ecosystems. Gills tissue is one of the main targets for heavy metal accumulation. The objective of this study was to investigate the transcriptional responses of gill tissue of Manila clam after experimental exposure of Cu and Cd.

We have sequenced the transcriptome of Manila clam cDNA by 454 sequencing and then constructed the 4X 44K oligo microarray. Adult Manila clams were exposed to 5.0 mg/L Cu^{+2} ($CuCl_2$ -L) and 1.0 mg/L Cd^{+2} ($CdCl_2$) in separate tanks for 24 h. After exposure, five clams (n=5) from each group (control and exposed) were immediately dissected for isolating the gill tissues. Using RNA samples of gills at 6 h and 24 h, oligo microarray analysis was conducted and screened the highly responded genes.

A total of 2,159 and 2,333 transcripts in gills have up regulated (≥2-fold) in response to Cu exposure at 6 h and 24 h, respectively. Among them 265 transcripts were commonly up-regulated at 6 h and 24 h indicating that those genes may be involved in Cu detoxification or related function. Under Cd exposure there were 2,303 and 2,349 up-regulated transcripts at 6 h and 24 h, respectively with 256 commonly up-regulated transcripts. Both Cu and Cd exposure has resulted the down regulation of wide array of genes which may be due to inactivation of metal related transcription and lowering the energy metabolism. Screening of gene expression profiles clearly shows that highly responded genes which belonged to transcription factors, heat shock proteins, antioxidant enzymes, cytokines and other immune and stress related function. Further functional characterization of these genes will provide the basis for understanding their relation against Cu and Cd toxicity.

PP-236

Distribution characteristics of the malacofauna in habiting in subtidal rocky bottom in Jeju Island

Jong-Uk Lee[1*], Min-Ho Son[1], Dae-Ik Kim[1] and Ki-Joon Kim[2]

[1]Marine Eco-Technology Institutute Co., Ltd. 485-1 Yongdandong, Namgu, Busan 608-830, Korea

[2]Jeju Ocean, Idoil-dong, Jeju-si, Jeju-do, 690-231 Korea

This study was performed to identity the vertical and horizontal distribution characteristics of malacofauna inhabiting in subtidal rocky bottom in Jeju. Seasonal sampling was performed from June 2011 to February 2012 at 12 stations, and the specimens were sampled quantitatively with SCUBA diving at 5 m and 10 m in depth.

Total of 173 molluscan species were sampled. Mean molluscan density and biomass (data pooled) were 151 ind./m^2 and 162.34 gWWt/m^2 respectively. Based on the Lebris index (1988), top 5 species (*Bittium variegatum*, *Lithophaga curtus*, *Musculus pusio*, *Astralium haematragum* and *Mitrella bicincta*) were accounting for approximately 45.83% of total individuals. Coastal areas of Jeju Island could be divided into two groups according to the seawater temperature regime, which were the northwest coast including station 1 to 6 and the southeast coast including station 7 to 12. Number of species and individuals were higher in the northwest coast than those in the southeast coast, and biomass was higher in the southeast coast than that in the northwest coast. Number of species by depth was higher at 10 m in depth than that at 5 m in depth, while number of individuals and biomass were higher at 5 m in depth than those at 10 m in depth. Therefore, distribution of malacofauna were characterized by the seawater temperature regime affecting coastal area around Jeju Island.

PP-237

Population structure analyses of *Crassostrea ariakensis* in East Asia using five concatenated mitochondrial DNA sequences

Eun-Ha Shin[1], Ju Lan Kim[1], Hee Jeong Kong[1], Hyung Soo Kim[1], Sudath T. Dammannagoda[2], Hyungtaek Jung[2], Cheul Min An[1], and Woo-Jin Kim[1*]

[1]Biotechnology Research Division, National Fisheries Research and Development Institute, Korea

[2]School of Earth, Environmental and Biological Sciences, Queensland University of Technology, Australia

The native Asian oyster, *Crassostrea ariakensis* is one of the most common and important *Crassostrea* species that occur naturally along the coast of East Asia. Molecular species diagnosis is a prerequisite for population genetic analysis of wild oyster populations because oyster species cannot be discriminated reliably using external morphological characters alone due to character ambiguity. To date there have been few phylogeographic studies of natural edible oyster populations in East Asia, in particular this is true of the common species in Korea *C. ariakensis*. We therefore assessed the levels and patterns of molecular genetic variation in East Asian wild populations of *C. ariakensis* from Korea, Japan, and China using DNA sequence analysis of five concatenated mtDNA regions namely; 16S rRNA, cytochrome oxidase I (CO I), cytochrome oxidase II (CO II), cytochrome oxidase III (CO III), and cytochrome *b* (Cyto b). Two divergent *C. ariakensis* clades were identified between southern China and remaining sites from the northern region. In addition, hierarchical AMOVA and pairwise Φ_{ST} analyses showed that genetic diversity was discontinuous among wild populations of *C. ariakensis* in East Asia. Biogeographical and historical sea level changes are discussed as potential factors that have influenced the genetic heterogeneity of wild *C. ariakensis* stocks across this region.

PP-238

Genetic Distances and Identification of Three White Clam (*Meretrix* spp.) Populations Analyzed by PCR

Dae-Hyun Kim*, Kyung-il Park and Jong-Man Yoon

Department of Aquatic Life Medicine, College of Ocean Science and Technology, Kunsan National University, Gunsan 573-701, Korea

Muscle tissues were collected separately from three species of *Meretrix spp.* from three different provinces in Korea: Gunsan, Shinan and Yeonggwang in three coastal areas of Korea. Genomic DNA and mitochondrial DNA was extraction from *Meretrix* spp. An approximate 720bp fragment of the mitochondrial cytochrome *c* oxidase subunit Ⅰ (COⅠ) was amplified by PCR using specific primer. RFLP surveys of the COI region indicated that *Hinc*Ⅱ digestion produced heterogeneous distributions of restriction types among samples. PCR analysis was performed on the muscle extract of 21 individuals using seven oligonucleotides primers. Seven selected primers were shown to generate identical, specific and polymorphic loci, which could be clearly scored. Amplification of a single COI fragment (approximately 720 bp) was imagined, and no apparent size differences were perceived in amplified fragments between *Meretrix lusoria* and *M. petechialis* individuals. *Hinc*II digestion of PCR products revealed two unique restriction patterns designated type A (418bp and 306bp fragments) and type B (479bp and 247bp), that were completely diagnostic to distinguish *M. lusoria* from *M. petechialis* individuals. However, no one of the three populations sampled in Korea contained *M. petechialis* restriction type A phenotypes. In this study, the dendrogram obtained by the seven decamer primers indicates three genetic clusters: cluster 1 (GUNSAN 01 ~ GUNSAN 07), cluster 2 (SHINAN 08 ~ SHINAN 14) and cluster 3 (YEONGGWANG 15 ~ YEONGGWANG 21). Among the seven Common orient clam the shortest genetic distance that displayed significant molecular differences was between individuals 13 and 14 from the Shinan population (genetic distance = 0.036), while the longest genetic distance among the twenty-one *Meretrix lusoria* individuals that displayed significant molecular differences was between individuals GUNSAN no. 01 and SHINAN no. 14 (genetic distance = 0.574).

PP-239

A Study on the Optimum Stocking Density of Abalone, *Haliotis discus hannai*reared in Net Cage Culture of Indoor Tank Culture

Byeong-Hak Kim*, Mino-Woo Park- Kim, Tae-Ik Kim, Maeng-Hyun Son, Si-Woo Lee
SouthwestSea FisheriesResearch Institute, NFRDI, Yeosu 556-823, Korea

The effects of different stocking densities on the growth and survival rate of the abalone, *Haliotisdicusshannai,* wereinvestigated in marine net cage for two years.

Stocking density was set 15, 30, 45 and 60 percentage (= per.)/$m^2$with share tocross-sectional area per shelter. The primary rearing period (PRP) and the secondary rearing period (SRP) were conduct by a year. One year mean water temperature of PRP and SRS showed the difference about 2℃.

In the growth performance of reared abalone (initial mean shell length, 36.14±2.28 mm) for PRP, the absolute growth rate (ARG), daily growth rate (DGR) and specific growth rate (SGR) of the 15 per./m^2 were higher than those of density groups ($P<0.05$). Survival rates of all density groups showed no significant difference.

In the growth performance of reared abalone (initial mean shell length, 55.26±6.93 mm) for SRP, the ARG, DGR and SGR of stocking density groups showed no significant difference, except for 45 per./m^2 density group. Survival rate in the low-density (15, 30 per./m^2) was more than 70%, and those of the high-density (45, 60 per./m2) were less than 31% and 9%, respectively.

These results showed that the appropriate stocking density for 15 per./m^2 was seven hundred fifty number per one net cage (2.4 × 2.4 m), during PRP using 3-4 cm abalone in length.

Also for the secondary rearing period, the optimal stocking density (shell length 5-6 cm of abalone) consider with the economic efficiency was determined to be 30 per./m^2, resulting the productivity improved.

*Corresponding author : Kim, Byoung-Hak
Tel: (82) 61-690-8980, e-mail :bhkim1@korea.kr

PP-240

The Effects of Growth and Survival Rate on Feeding Rate of Abalone *Hailotis discus hannai* reared in Net Cage Culture of Indoor Tank Culture

Byeong-Hak Kim*, Mino-Woo Park- Kim, Tae-Ik Kim, Maeng-Hyun Son, Si-Woo Lee
SouthwestSea FisheriesResearch Institute, NFRDI, Yeosu 556-823, Korea

The effects of different feeding rate on the growth and survival rate of the abalone, *Haliotisdicusshannai*, were investigatedin marine net cage and indoor tank.

Feeding rate is determined that was to feed thefive, ten, fifty and twenty percentage to abalone at body weight onceevery day: the five daily feeding rate (5DFR), 10DFR, 15DFR and 20DFR. After that, it was conducted to rearingfor thirteen month with two replicates in net cage and indoor tank.

In the growth performance of reared abalone (initial mean shell length, 54.18±7.39 mm) in net cage, that the absolute growth rate (ARG), daily growth rate (DGR) and specific growth rate (SGR) to the shell length and shell breadth, as well as weight gain (WG), daily weight gain (DWG) and specific weight gain (SWG) to body weight of 20DFR were lower than those of different groups ($P<0.05$). Also, survival rates of 20DFR was lower than those of different groups ($P<0.05$).

In the growth performance of reared abalone (initial mean shell length, 49.70±2.28 mm) in indoor tank, that the ARG, DGR and SGR to the shell length and shell breadth, as well as WG, DWG and SWG to body weight of 5DFR and 10DFR were lower than those of different groups ($P<0.05$). And also, survival rates of 20DFR was lower than those of different groups ($P<0.05$).

Therefore, these results show that the daily feeding rate for natural feed in net cage and indoor tank should be to supply among five to ten percentages, taking into account growth, survival rate and economic efficiency.

*Corresponding author : Kim, Byoung-Hak
Tel: (82) 61-690-8980, e-mail :bhkim1@korea.kr

PP-241

The Effect of Growth and Survival Rate ofJuvenileAbalone*Hailotis discus hannai*According to Intermediate Culture in Net Cage and Indoor Tank

Byeong-Hak Kim*, Mino-Woo Park- Kim, Tae-Ik Kim, Maeng-Hyun Son, Si-Woo Lee
SouthwestSea FisheriesResearch Institute, NFRDI, Yeosu 556-823, Korea

This study was conducted to investigate the effect of Intermediate culture types on the growth and survival rate of the abalone, *Haliotisdicusshannai* in net cage and indoor tank.

Intermediate cultures were to determine there that was to setting at marine net cage culture (NCC) in net cage, floor culture (FC), net floor culture (NFC), double shelter culture (DSC) and indoor net cage culture (INCC) in indoor tank, in two replicate.

In the growth performance of juvenile abalone reared through intermediate culture, that the absolute growth rate (AGR_{SL}, AGR_{SB}), daily growth rate (DGR_{SL}, DGR_{SB},) and specific growth rate (SGR_{SL}, SGR_{SB}) to the shell length ($_{SL}$) and shell breadth ($_{SB}$) of NCC were higher than those of different groups ($P<0.05$). As weight gain (WG), daily weight gain (DWG) and specific weight gain (SWG) to body weight through intermediate culture types in indoor tank was not significant. Also that, survival rate among experimental groups of intermediate culture in indoor tank was not significant.

Therefore, these results is showed that should to cultivate for net cage so that intermediate culture of juvenile abalone over 2 cm, accordingly research to effective progress of juvenile abalone intermediate culture in indoor tank be should from various reason as well as feed and rearing condition.

해양수산부지정

해양어류자원 기탁등록보존기관

MFRBK

Marine Fish Resource Bank of Korea

부경대학교 자원생물학과 어류학실험실

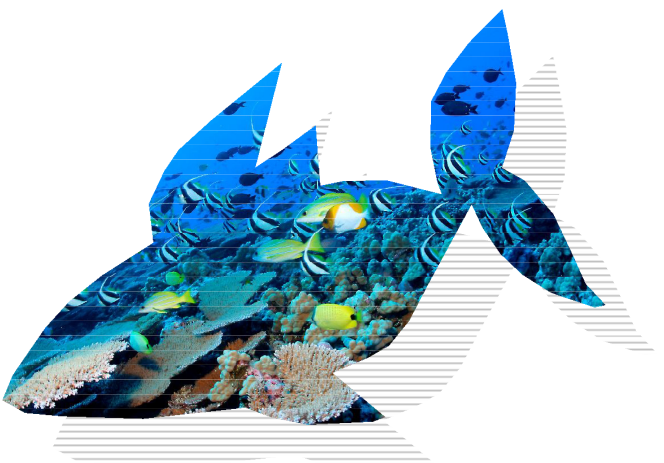

(608-737) 부산광역시 남구 용소로 45 부경대학교 자원생물학과
연구실: (051) 629 – 5927 (책임: 김진구교수, 연구원: 이수정)
FAX: (051) 629 – 5931

해양수산부

국립부경대학교 PUKYONG NATIONAL UNIVERSITY

Designed by 송영선

한 국 생 태 연 구 원 ㈜

Korea Ecology Institute Co., Ltd

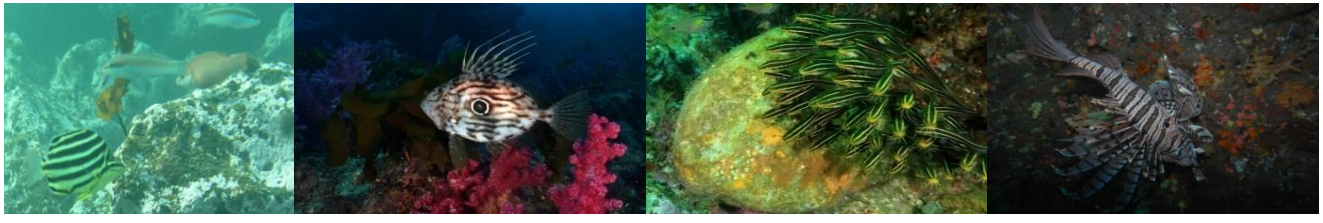

본　　사 : 충청남도 서천군 옥남길 11-18　www.keic.net　☎: 0505-836-4000　Fax: 0505-836-5000

Daum 클라우드 keic114-k1234567

출　판　사 : 전북 군산시 신평길 12 (수송동, 동영상가 210호)

생 태 사 업 부 : 전북 군산시 대학로 558 (군산대학교 산학협력관 507호)

기업부설연구소 : 전북 군산시 대학로 558 (군산대학교 산학협력관 506호)

☎: 063-463-6653　Fax: 063-463-6654　jeong@kunsan.ac.kr　keic114@daum.net

한국생태연구원(주)의 주요사업내용

- 환경영향평가 대행
- 해역이용협의 & 해양환경영향조사
- 해역이용영향평가
- 엔지니어링활동주체(해양)
- 생태연구조사 및 복원
  1) 기초연구과제 및 비영리 수탁 연구과제
  2) 해양 및 호소 생태계 현황조사
  3) 생태 모니터링 기법 개발 및 모델링 연구
  4) 생태복원 및 보전이 필요한 지역의 자생종 연구
  5) 전략환경평가에 따른 생태 지표 및 영향예측 기법 개발

· 해양 바이오 기업부설연구소

1) 생물천연물질생산
2) 플랑크톤 종주확보 및 배양
3) 표준시험생물의 배양 및 판매
4) 학술. 기술 연구용역사업

· 도서출판 한국생태연구원

1) 학술.연구도서 출판
2) 도서유통